B. SURFACE EQUIPMENT

1. Stuffing Box

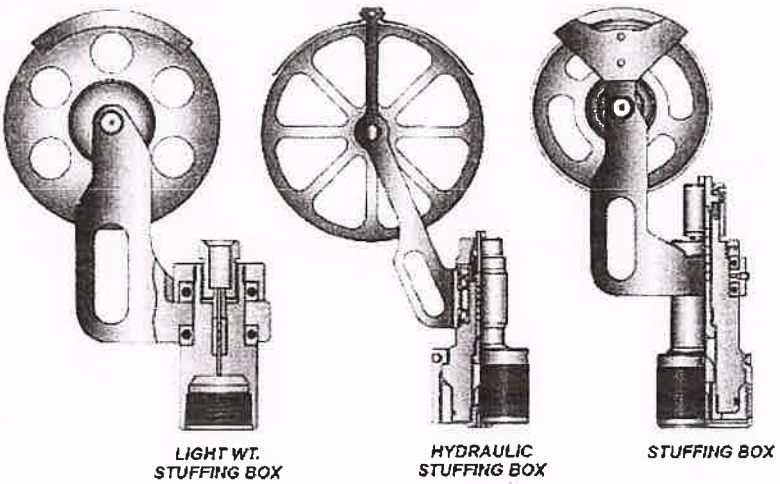

What is Stuffing Box

- Pressure control
- Equipment use to guide wireline go through into the well.

What is the purpose of stuffing Box

To make sure no pressure out while wireline go through well which seal by packing.

How to operate Stuffing Box

Properly connect hydrouic hose to injection point which come from control panel or by manual hand pump to pump the packing when necessary.

What is maintenance required for Stuffing Box

- Change and check the stuffing box packing, upper and lower gland.
- ~~are~~ Greasing.

What is safety precaution required for Stuffing Box

Proper placement during install into skid to protect shake well.

James 21/11/24

What is potential hazard during handling Stuffing Box

- Slip disk
- pinch point
- Back injury.

Draw & name each part of stuffing box

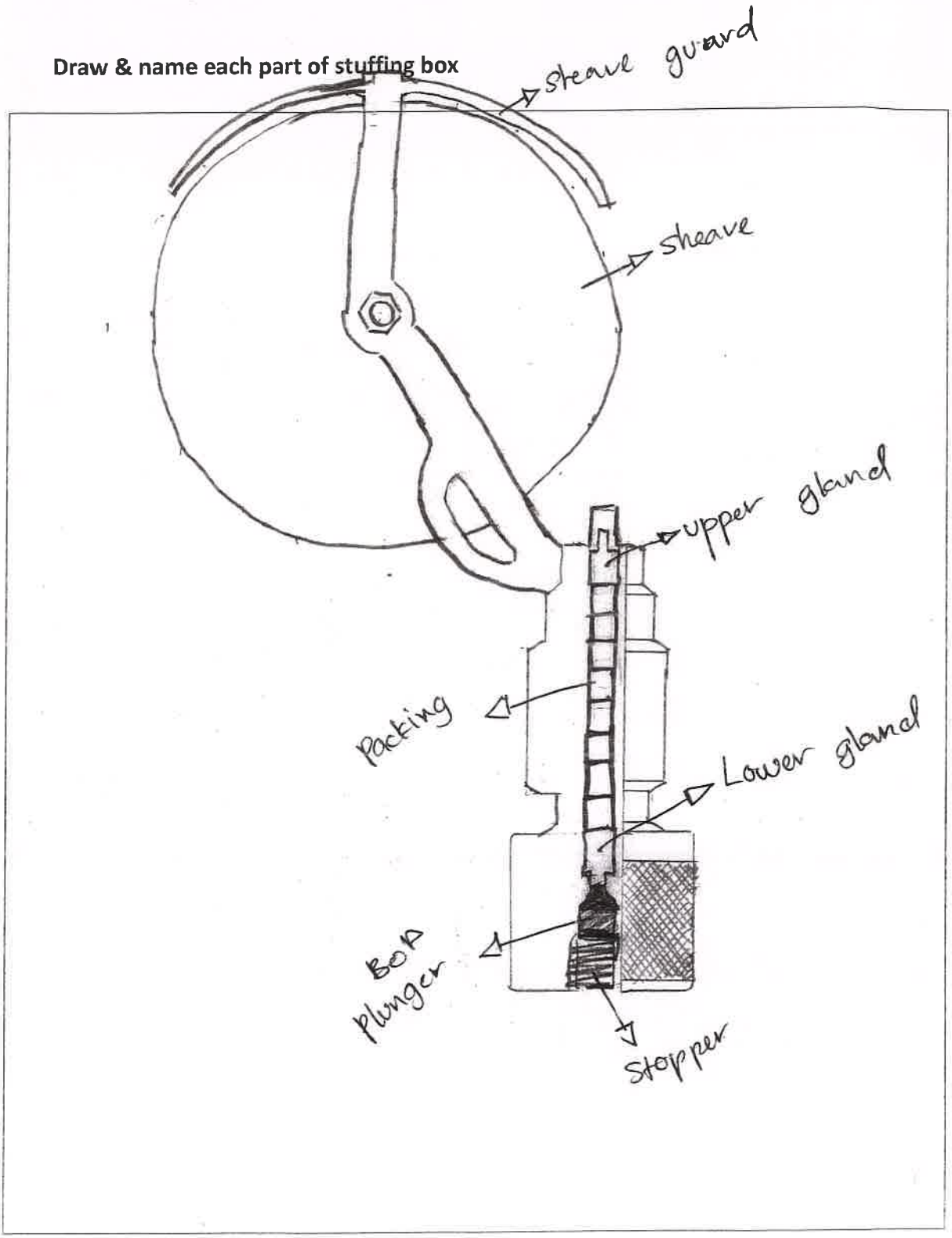

JAMES 21/11/24

2. Lubricator

What is Lubricator

is the high and low pressure pipe that has 'quick unions' connection.

What is the purpose of Lubricator

Is to enable to install or remove wireline toolstring from a well under pressure.

How to operate Lubricator

make sure the o-ring is fit before tight between lubricator and just using hand tight / c-spannar.

What is maintenance required for Lubricator

- greasing
- painting.

What is safety precaution required for Lubricator

- Ensure all connection is clean
- Protect thread with thread protector.

What is potential hazard during handling Lubricator

- Pinch point.
- bad injury.
- slip disk.

James 21/11/24

Draw & name each part of Lubricator

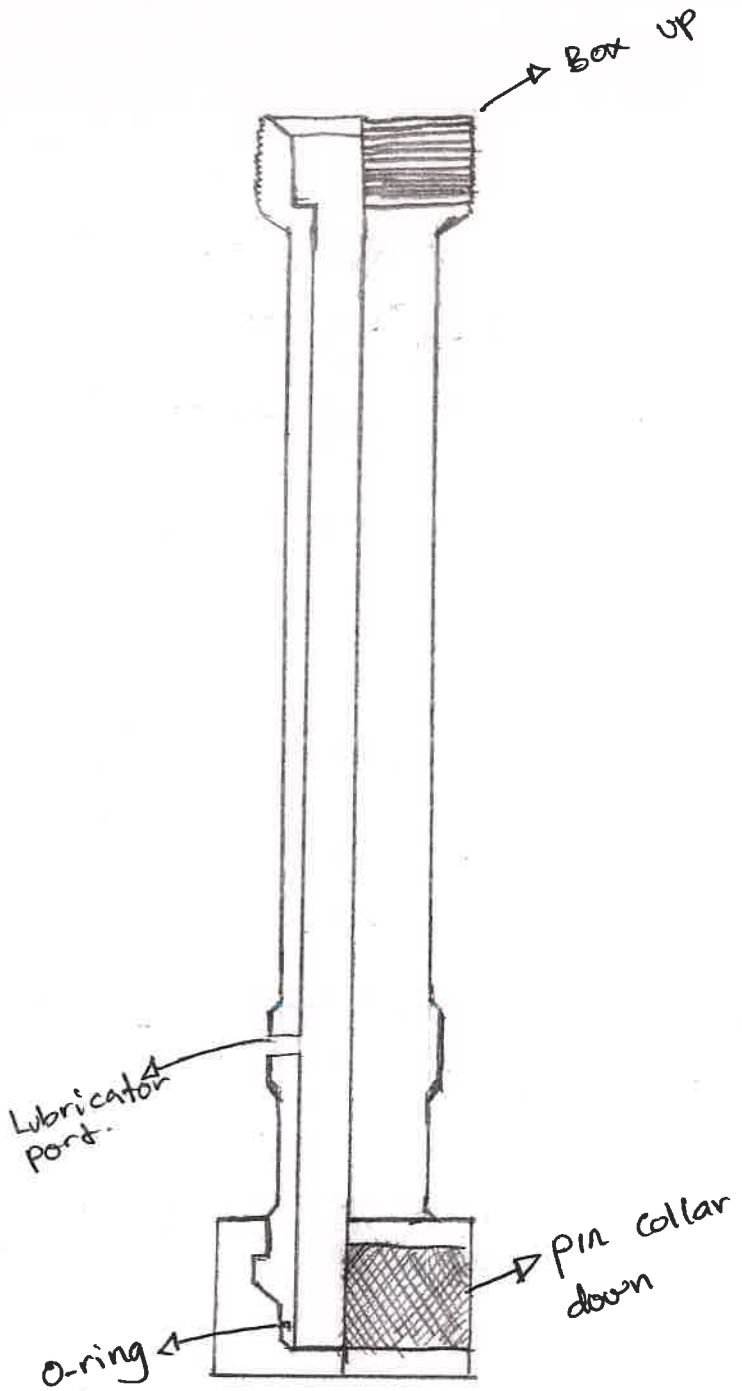

21/11/24

3. Blowout Preventer (BOP)

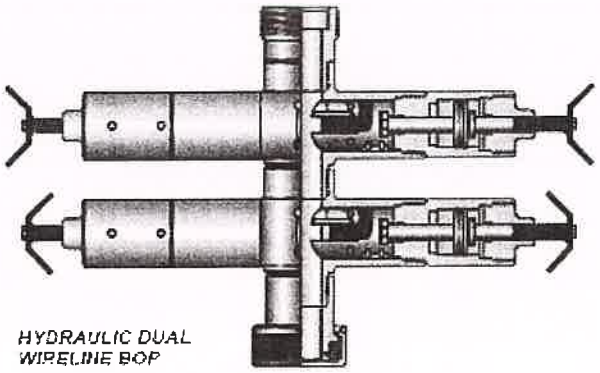

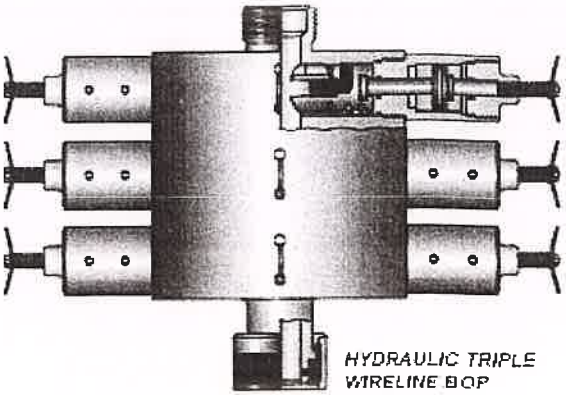

What is BOP

- Known as wireline valve that installed between the tree connection and lower lubricator section.
- one of the slicline PCE part of seal the pressure.

What is the purpose of BOP

- can isolated well pressure without at the wire with BOP Ram.
- to assemble wire cutter above the BOP rams.

How to operate BOP

- operate by hydraulic pressure that connect from control panel to BOP rams.
- also can operate by manual with handle for close only.

What is maintenance required for BOP

- Function test the rams.
- function test the equalizing port
- hyd. test
- Greasing.

What is safety precaution required for BOP

- ~~hard fryer injury~~.
- BOP hold pressure from one direction only.

JAMES 21/4/24

What is potential hazard during handling BOP

- Pinch point
- ~~Slip~~ Back injury /slip disk
- drop object.

Draw & name each part of BOP

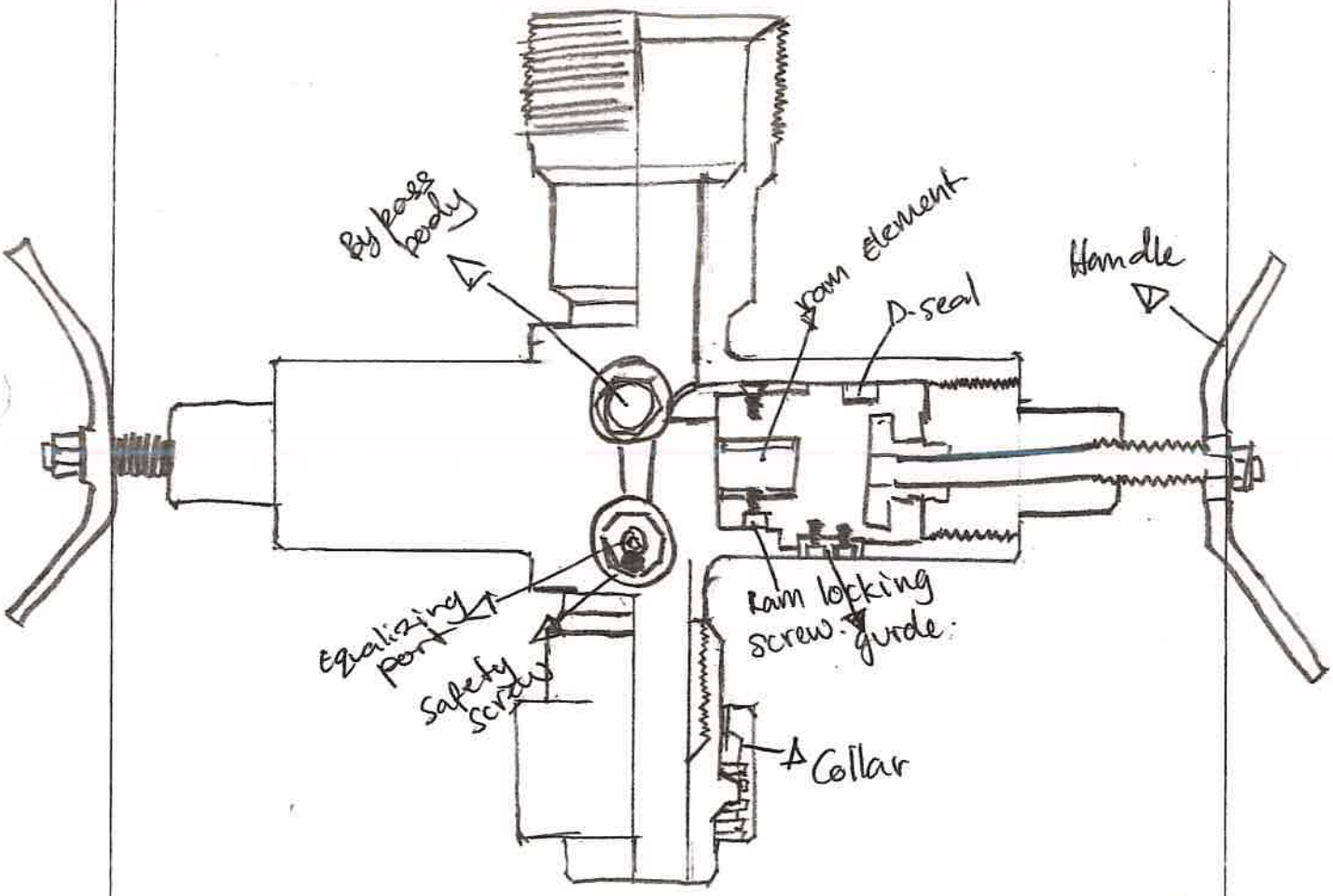

JAMES 21/11/24

4. X-Mas Tree

What is x-mas tree

is a series of valve installed on the wellhead to control the flow of fluid from the well.

What is the purpose of x-mas tree

- for wireline job crew to do the job, put BOP and other tools upside the x-mas tree and x-mas tree also for the last safety valve for the resovoir.

How to operate x-mas tree

- make sure the swab valve, lower master valve and SCSSV is closed and do with the light turn

What is maintenance required for x-mas tree

- greasing an tree cap
- make sure x-mass tree wheel on good condition.

What is safety precaution required for x-mas tree

- count the valve turn when closing
- never use the master valve to shurt in flowing well except in an emergency.

What is potential hazard during handling x-mas tree

- miss turn of the gate valve
- finger injury

Draw & name each part of x-mas tree

TAMGS 21/11/24

Draw & name each part of x-mas tree

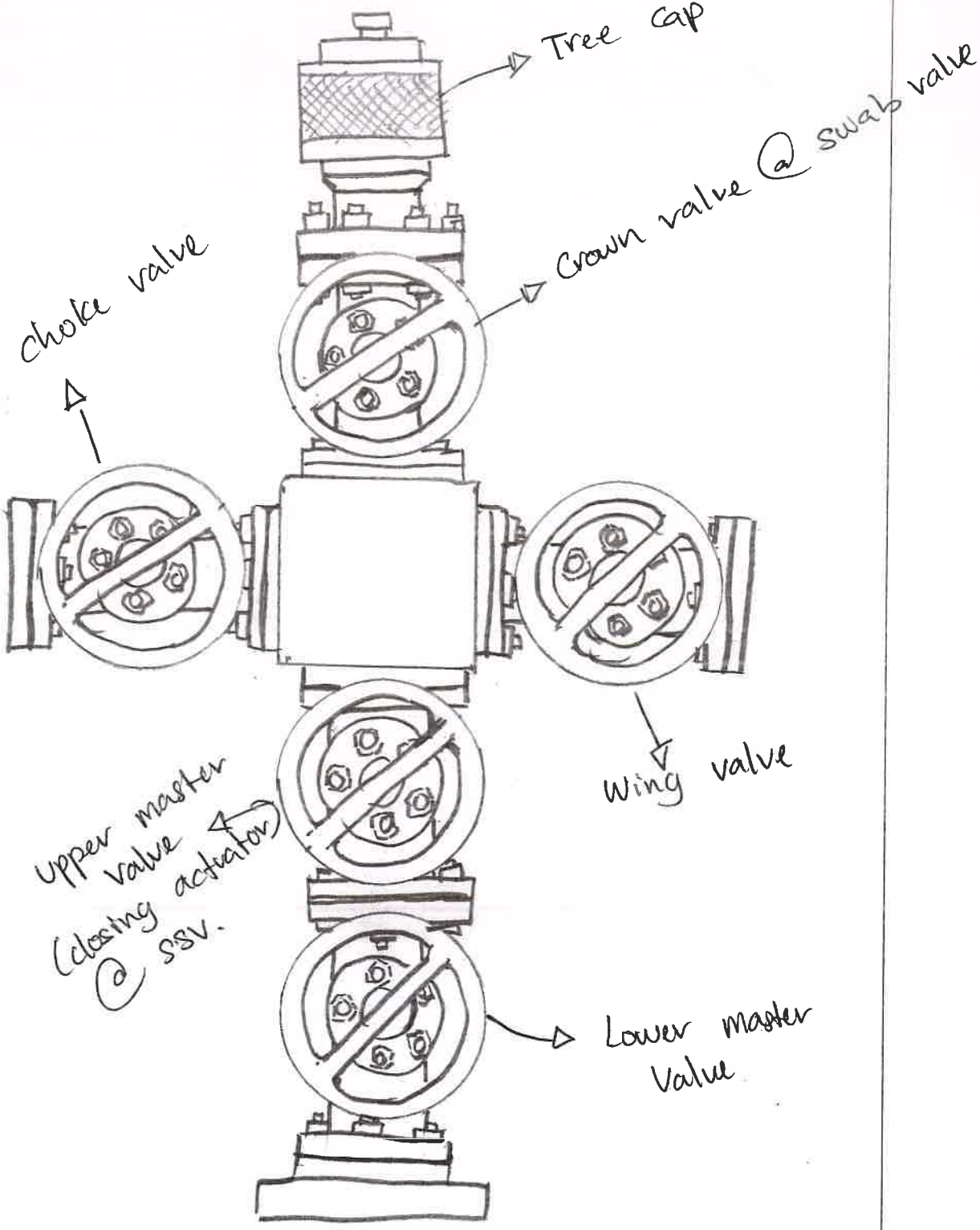

James 21/11/24

5. Wireline Reel Skid Unit (RSU) / Winch – Single Drum and Double Drum

What is RSU

That device that control sickline wire drum by power up and operate by hydroulic supply.

What is the purpose of RSU

To deliver and retriver tool down hole by using sickline wire.

How to operate RSU

Take hydroulic supply from power pack and control by using lever, gear and AA Valve.

What is maintenance required for RSU

- Check gear Box Condition (change when due)
- Check Valve Condition, make sure no leak.
- Check breake-

What is safety precaution required for RSU

- put guard on rotating equipment
- anchor the unit during job.
- put whip check on hyd. hose.

What is potential hazard during handling RSU

- hose burst.
- moving parts.
- pinch points.

Ganga 21/11/24

Draw & name each part of RSU

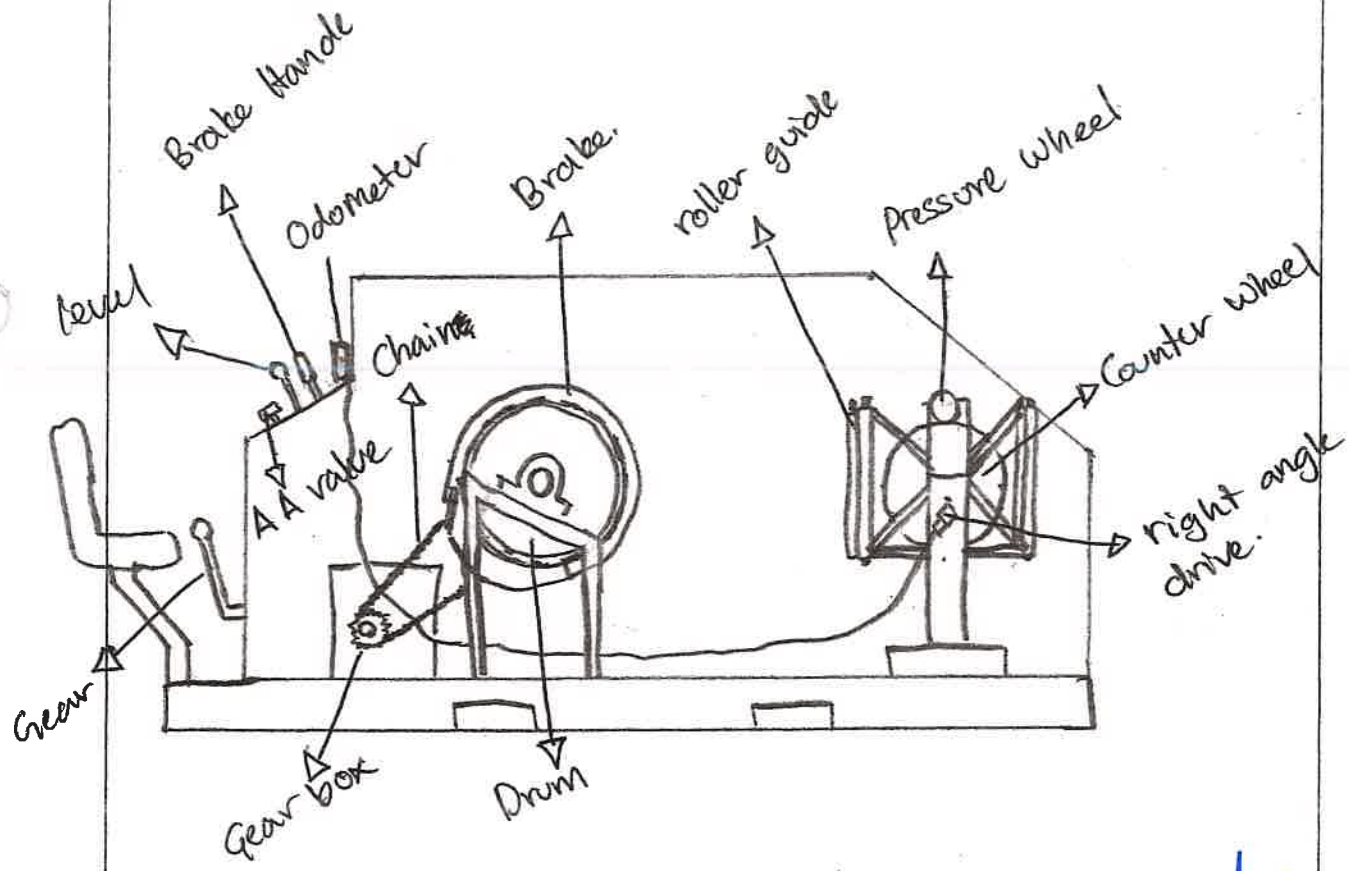

UAMGS 21/11/24

6. Odometer

What is Odometer

- Counter meter to count the depth.

What is the purpose of Odometer

- To measure depth that wire troveiled by counter wheel.

How to operate Odometer

- Connecting odometer cable to counter wheel.

What is maintenance required for Odometer

- Servicing and cleaning.
- greasing the odometer cable.

What is safety precaution required for Odometer

- Tighten the connection
- Use right ratio.
- make sure the counting number is static.

What is potential hazard during handling Odometer

- Hand injury
- miss depth if odometer reading failed.

James 21/11/24

Draw & name each part of Odometer

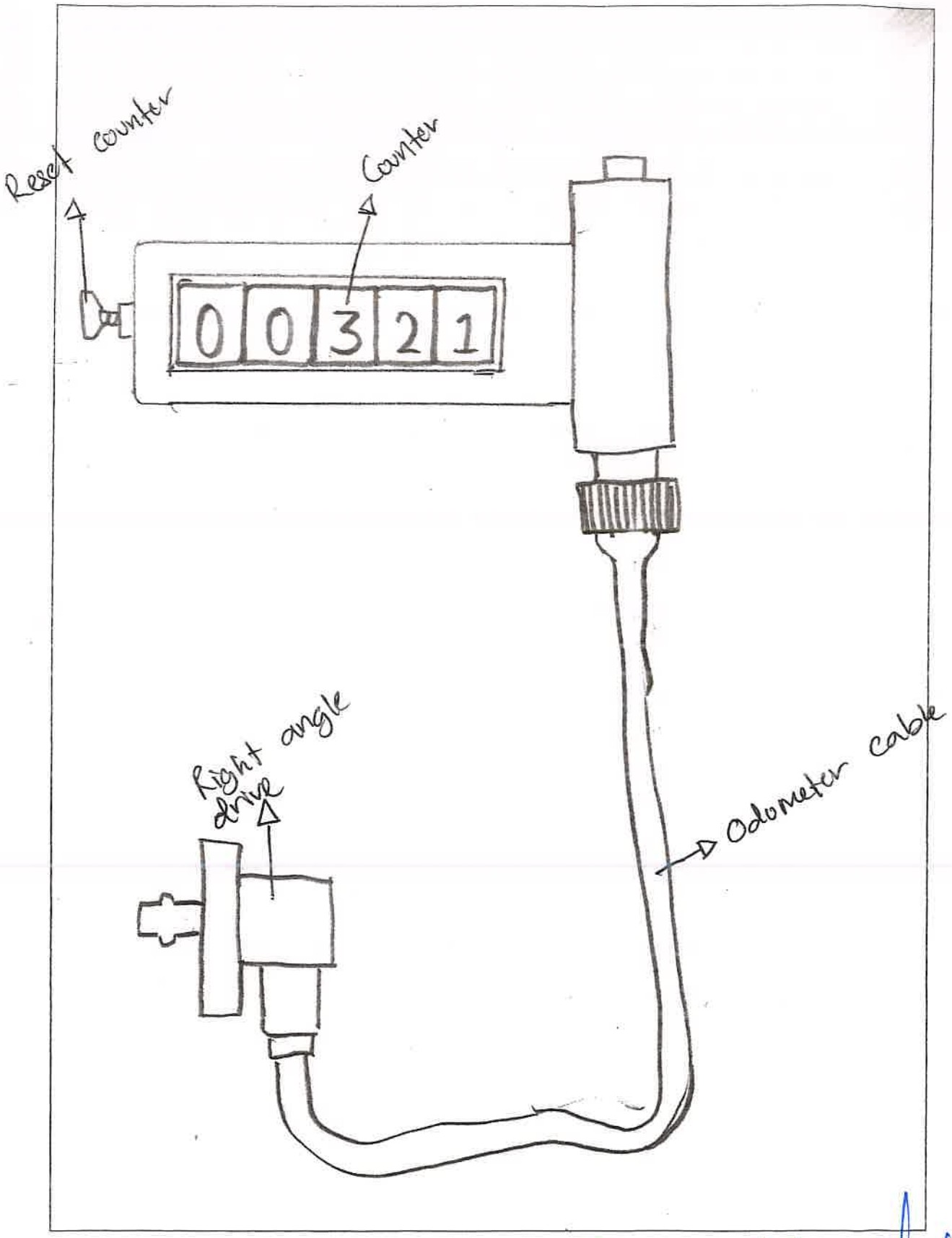

21/11/24

7. Weight indicator (200 lbs and 4000 lbs)

What is Weight Indicator
To show the weight of the toolstring during performing job entry / POOH

What is the purpose of Weight Indicator
guide to operator if any obstruction inside the well

How to operate Weight Indicator
Connect weight indicator to hay pulley.
- Free the tool by slack wire, and reset the reading of the guage before RIH to get accurate weight reading.

What is maintenance required for Weight Indicator
- Check the gap at weight indicator
- make sure fluid WO-15 is enough.
- Calibration date is valid.
- Function test.

What is safety precaution required for Weight Indicator
- make sure the calibration date is valid.
- Check the gap at load cell
- cover the weight indicator screen with bag.

What is potential hazard during handling Weight Indicator
- hose burs
- manual handling.

James 21/11/24

Draw & name each part of Weight Indicator

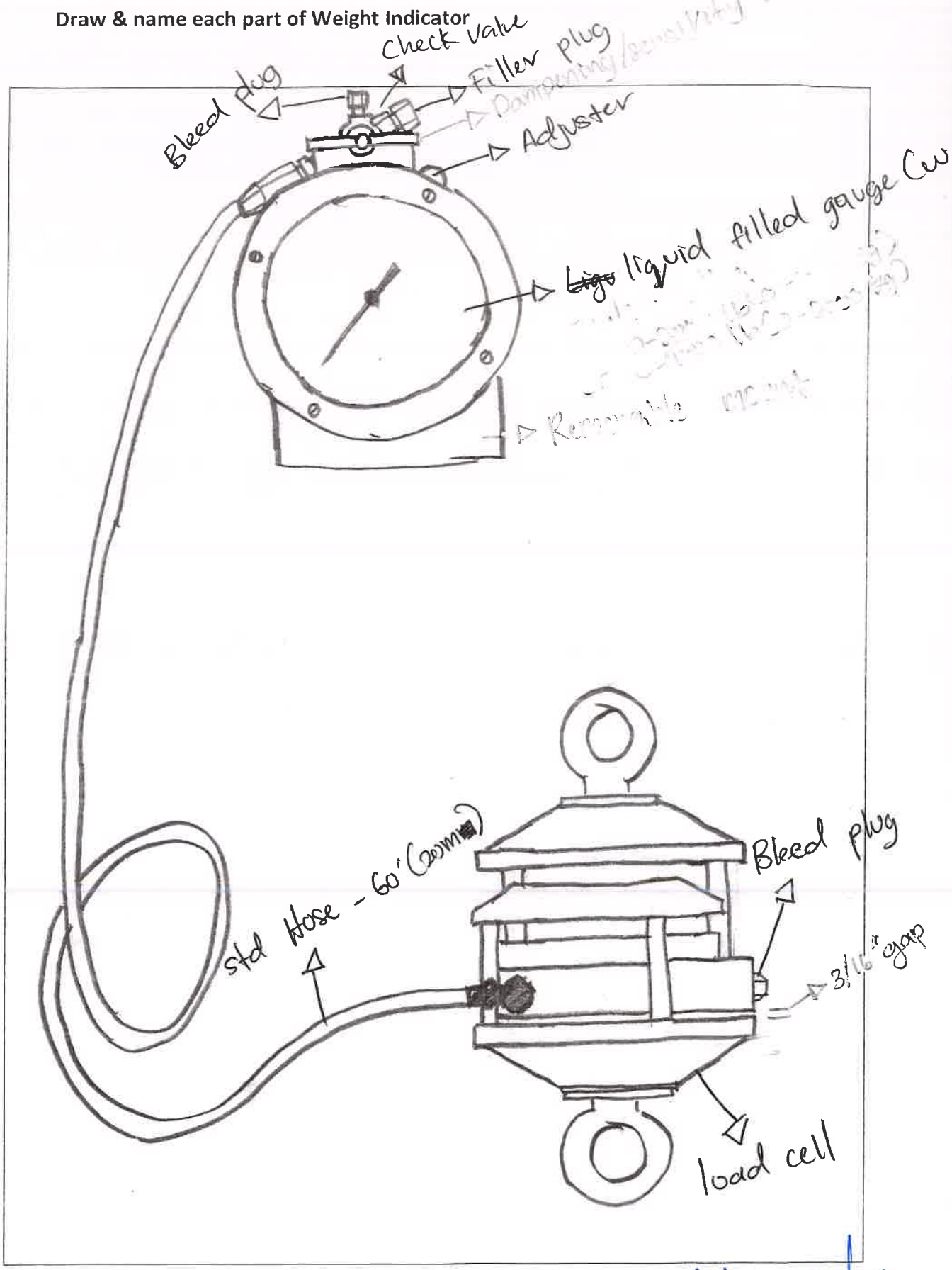

JAMES 21/11/24

8. Spooling Device

What is Spooling Device

device that control of tension wire during spooling operation.

What is the purpose of Spooling Device

~~for spooling the wire from drum~~
- For spooling wire from Drum to Reel.
- For spool wire from ~~Drum~~ Reel to Drum.

How to operate Spooling Device

- Connect to power pack
- Control the brake pressure to tension the wire.

What is maintenance required for Spooling Device

- Check gear oil
- Check directional valve
- Check hydraulic regulator.

What is safety precaution required for Spooling Device

- Do not stad line of fire during wire tension.
- function the ~~break~~ brake
- anchor.

What is potential hazard during handling Spooling Device

- hose burst
- high tention wire.

James 21/11/24

Draw & name each part of Spooling Device

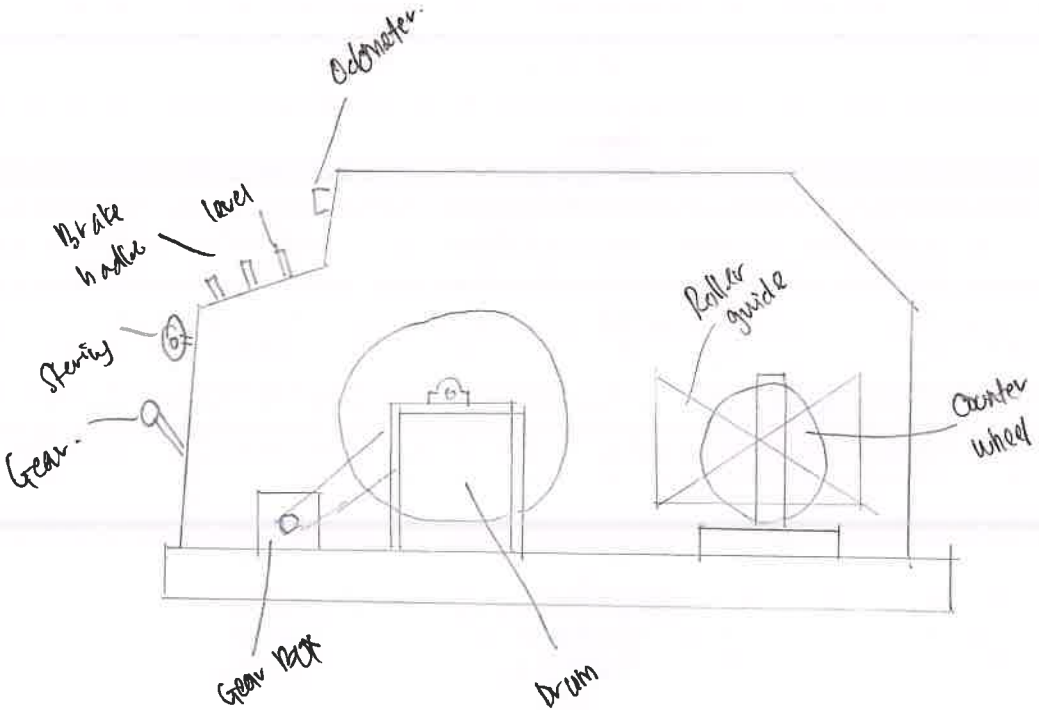

JAMES 21/11/24

9. Control Panel

What is Control Panel

Is a device that contain gauge, air regulator and hydroulic to supply pressure. It provide high pressure by a low pressure air or gas imput.

What is the purpose of Control Panel

- Used to supply the pressure to the control needed to keep safety valve in open position.

How to operate Control Panel

- Connect air supply and control air supply by air regulator.

What is maintenance required for Control Panel

- Check tubing connection
- Check hydrolic level.
- Check air regulator
- ensure gauge in good working and calibration.

What is safety precaution required for Control Panel

- Using proper PPE
- Stay away from line of fire.
- Secure hose connection.

What is potential hazard during handling Control Panel

- Hose burst
- malfunction gauge
- Tubing leaking.

James 21/11/24

Draw & name each part of Control Panel

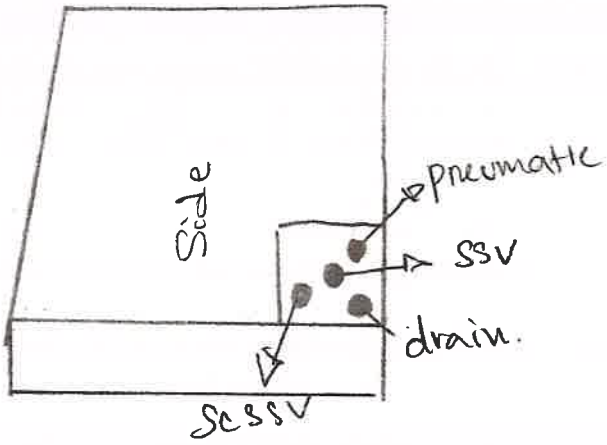

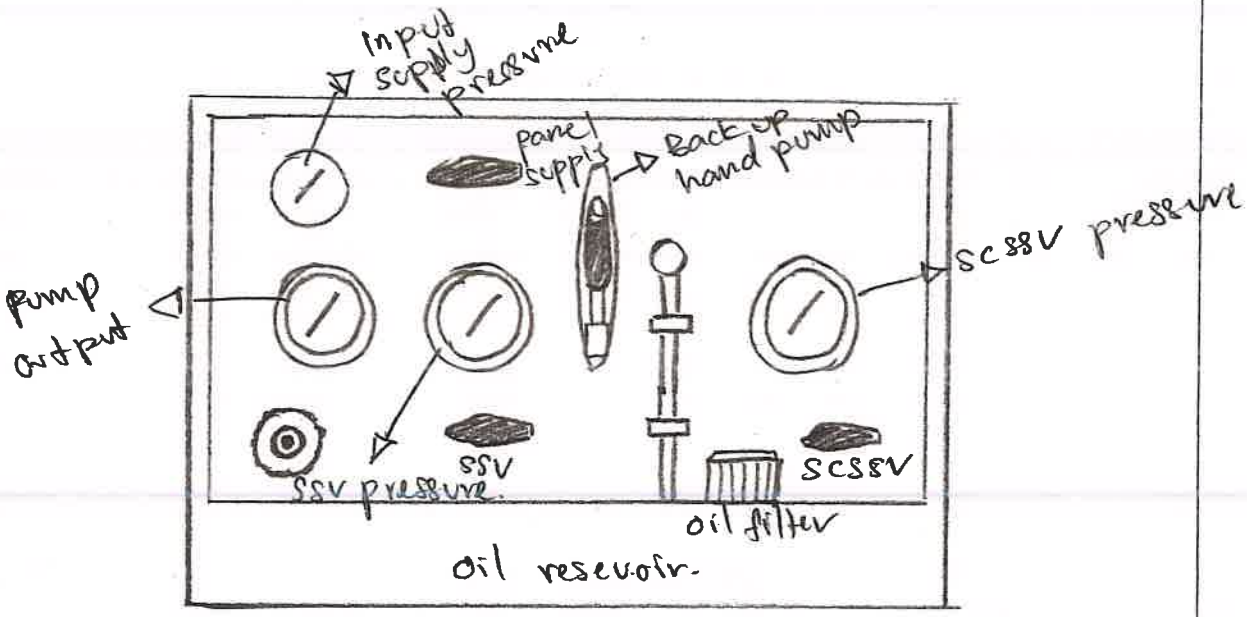

JAMES 21/11/24

10. Huskel Drum

What is Huskel ~~Drum~~ Pump

Huskel pump to generate fluid pressure.

What is the purpose of Huskel Drum

Huskel pump is attached to test pump and use for supply pressure to perform pressure test.

How to operate Huskel Drum

Get air supply from Air Compressor and Controlled by air regulator.

What is maintenance required for Huskel Drum

- Pedress tool.
- Services exzos.
- function test.

What is safety precaution required for Huskel Drum

- Use full PPE
- line of fire
- ensure no water Comeinside.
- Check for the hose and connection rating.

What is potential hazard during handling Huskel Drum

- Air hose burst.
- trap pressure.
- line of fire.

JAMES 21/11/24

Draw & name each part of Huskel ~~Drum~~ Pump

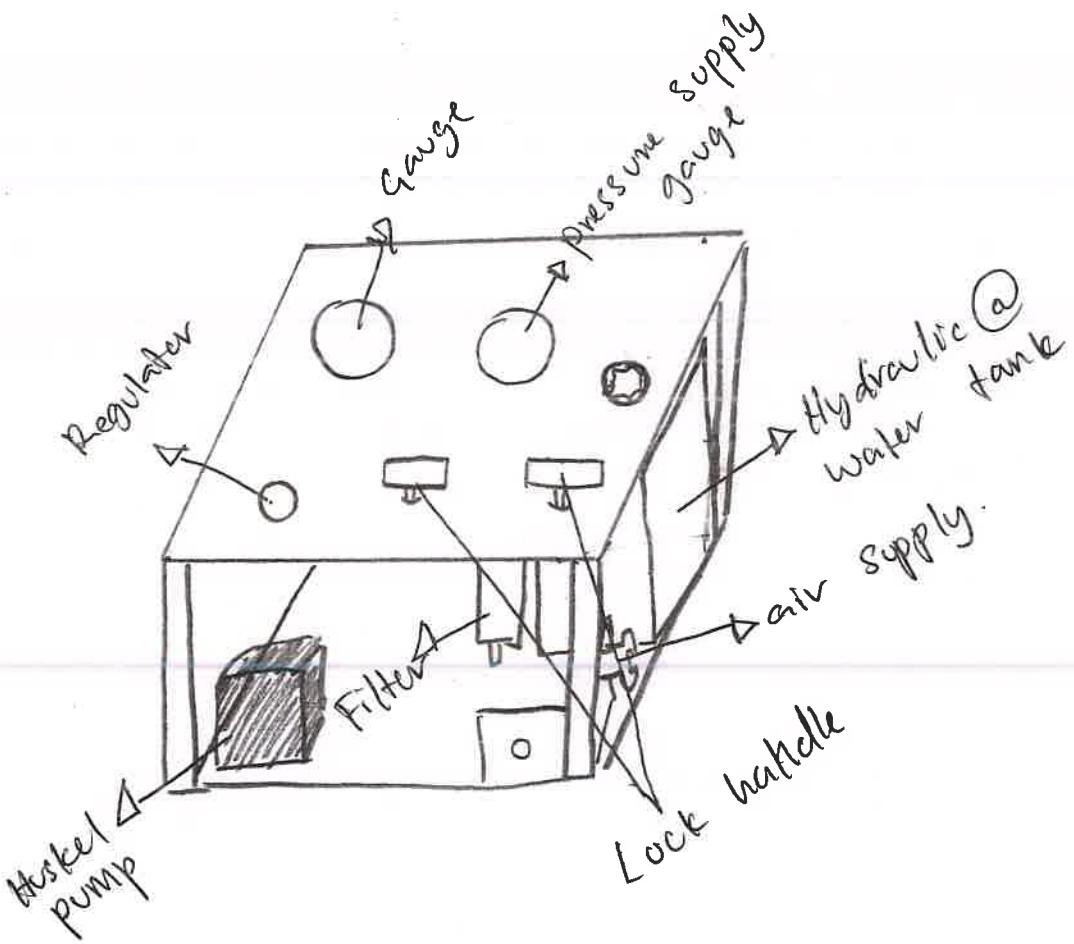

JAMES 21/11/24

11. Power Pack (Electrical & Diesel)

What is Power Pack
power pack is hydraulic Supplies that contain engine to run hydraulic pump.

What is the purpose of Power Pack
To Supply hydraulic to RSU for run hydraulic motor.

How to operate Power Pack
Firstly Connect hydraulic hose to RSU, then Connect air hose to power pack. Make sure before start power pack, check the engine oil, water, diesel and start the power pack.

What is maintenance required for Power Pack
- Change part of power pack such as engine oil, filter oil, ~~[illegible]~~, water cooler.
- Clean the flame trap when neccesary.

What is safety precaution required for Power Pack
- Ensure before do a run of power pack there is no have anything stay near on rotating equipment.
- Ensure hyd. hose connected. If not connected, release the PRV.
- If ~~[illegible]~~ hyd. hose connected to RSU make sure pru gear in neutral position.

What is potential hazard during handling Power Pack
- High pressure on running hydraulic
- Hot radiator
- Hot engine running
- Noise.

JAMES 21/11/24.

Draw & name each part of Power Pack

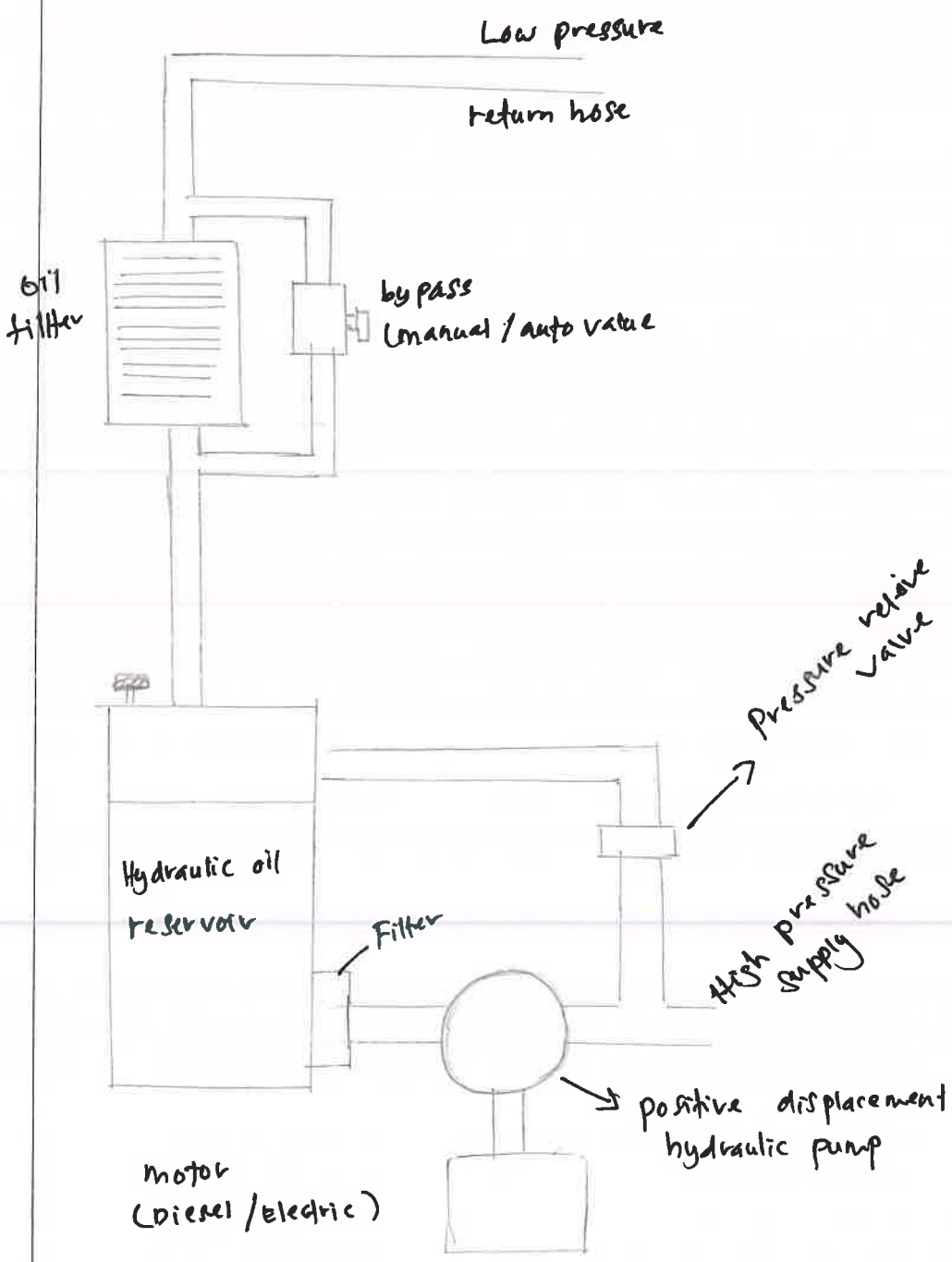

21/11/24

12. Air Compressor

What is Air Compressor

Air Com- is a surface equipment that use to storage air into Air tank (Air receiver tank)

What is the purpose of Air Compressor

- to storage Air and use to start surface equipment that use air starter system.
- also use to supply air for control panel, test pump.

How to operate Air Compressor

check engine oil, water; diesel level, use spring starter, turn knob valve; hold handle down intake shut down valve.

What is maintenance required for Air Compressor

- Change engine oil
- change filter oil
- Change or topup water cooler.

What is safety precaution required for Air Compressor

- wear ear plug
- Ensure engine in good condition.
- Ensure no unwanted thing near rotating part.
- Check for ESD function.

What is potential hazard during handling Air Compressor

- Noise
- High pressure
- Hot surface
- Rotating part.
- Hose burst

Samos 21/11/24

Draw & name each part of Air Compressor

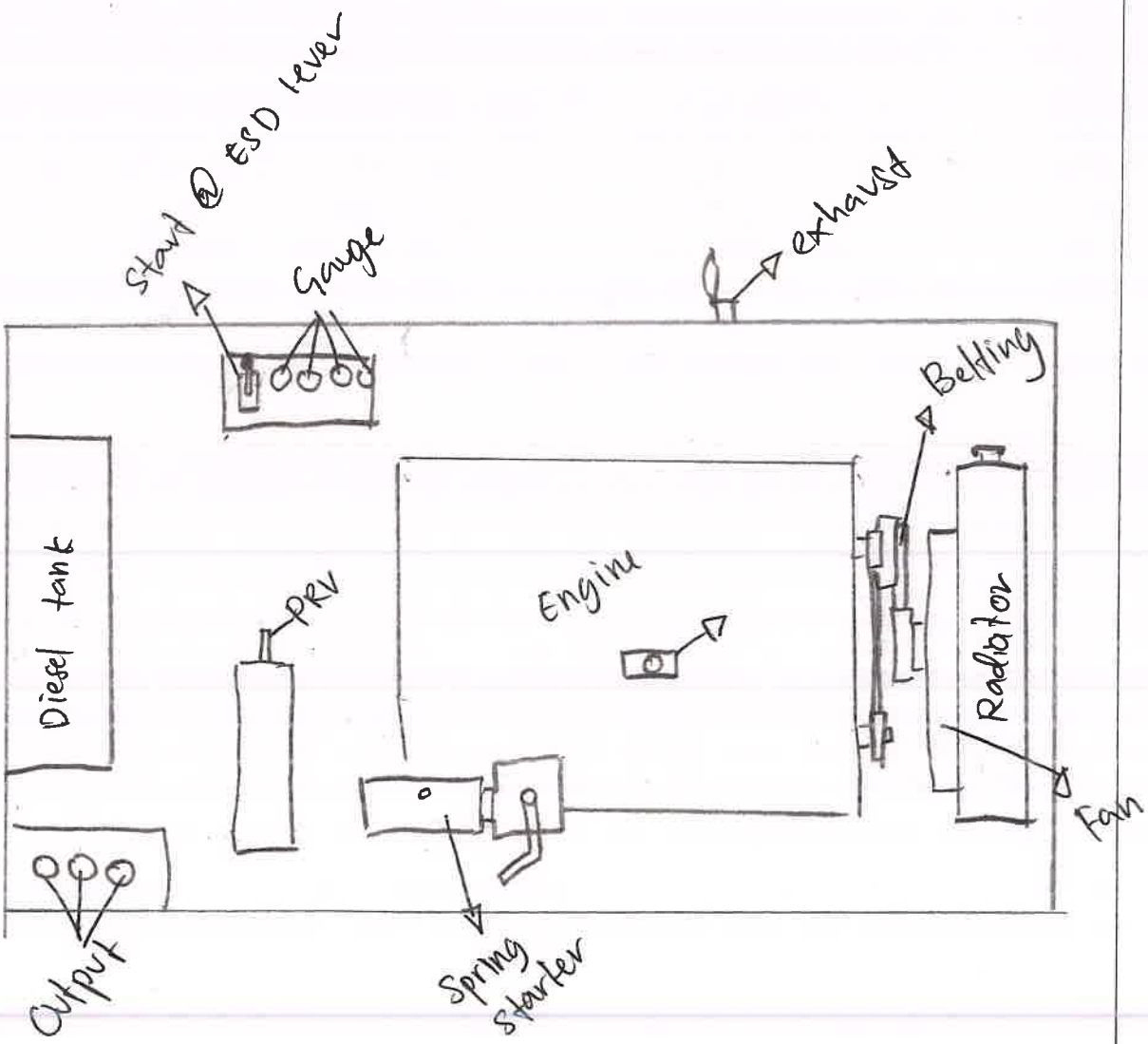

JAMES 21/1/24

13. Drum

What is the purpose of Drum

to storage wire.

Do the right and wrong wire arrangement from drum to hay pulley

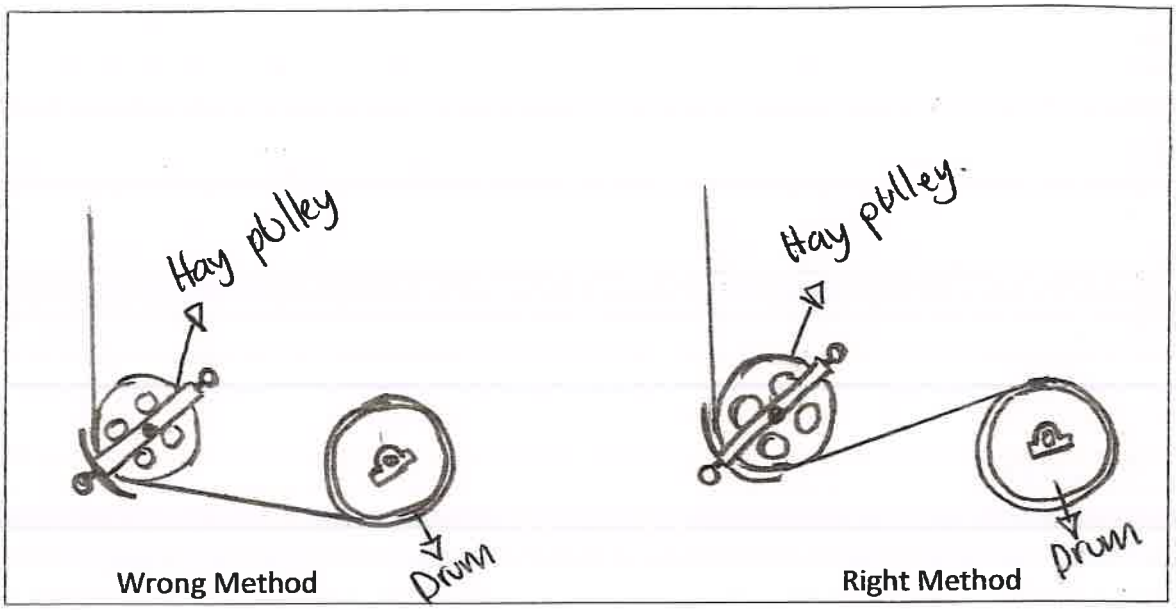

What is maintenance required for Drum

- Greasing bearing.

What is safety precaution required for Drum

- Ensure wire direction from drum is correct way.

What is potential hazard during handling Drum

- Pinch point
- sharp edge

21/11/24

Please draw/sketch the toolstring configuration for:

1) Drift run/tubing clearance check
2) Sinker bar run
3) Set and retrieve plug
4) Set and retrieve insert valve

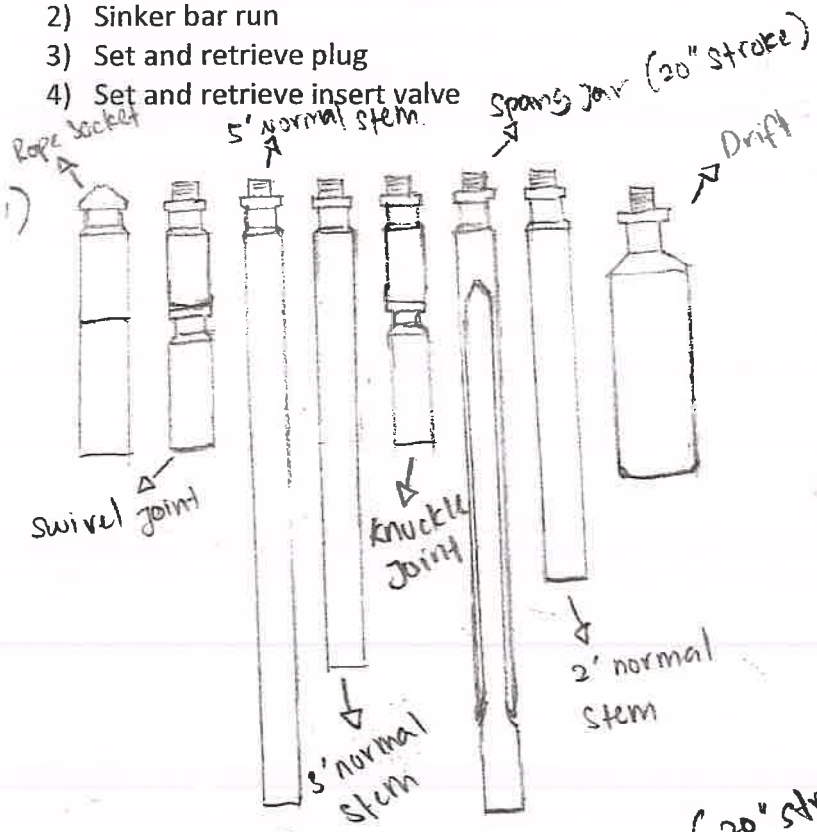

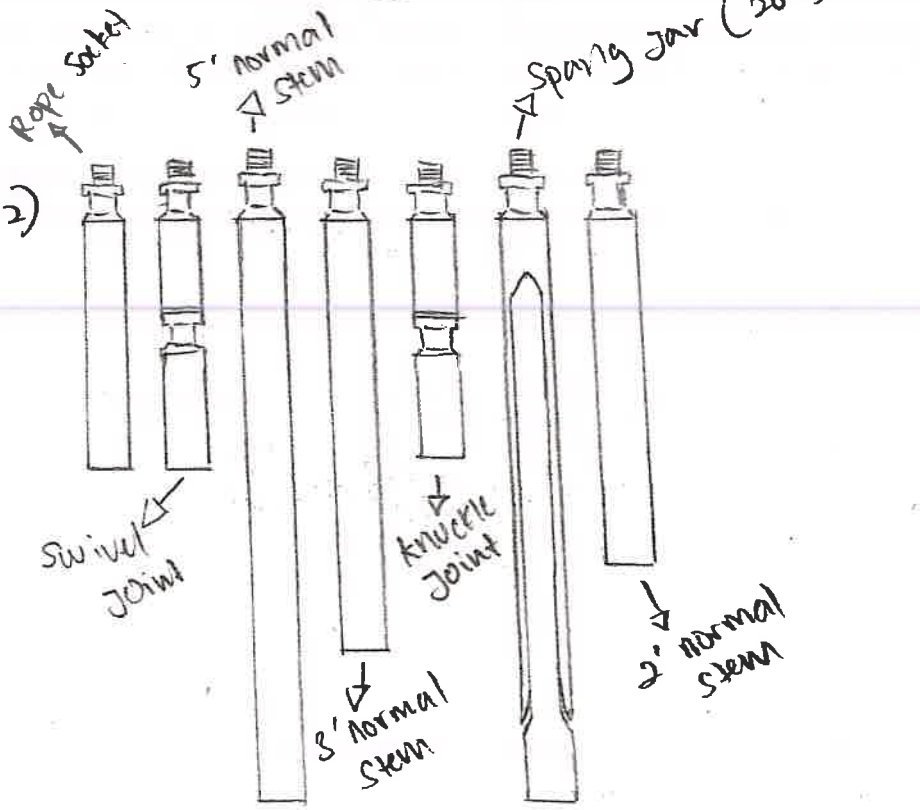

James 21/11/24