B. SURFACE EQUIPMENT

1. Stuffing Box

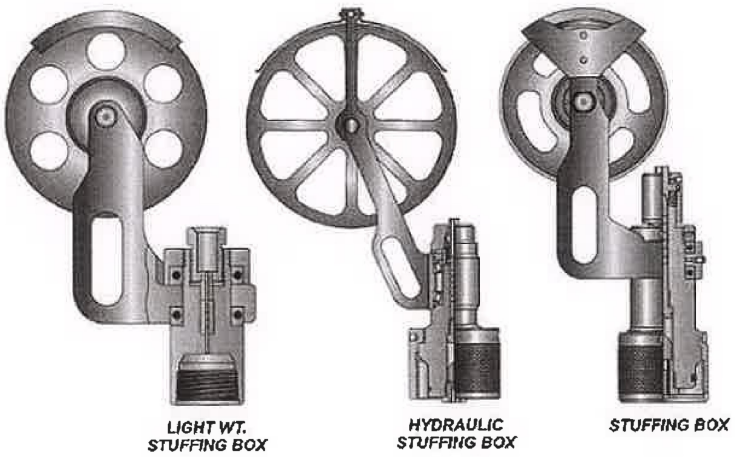

What is Stuffing Box

- Primary Pressure Barrier.
- Allows the wireline to enter the well under pressure and provide a seal should be wireline break and below out of packings.

What is the purpose of stuffing Box

- Seal around the wire at the upper end of the lubricator during slickline operation; in both static and dynamic conditions.

How to operate Stuffing Box

- It can be operate either manually or hydraulic without packing part modification out of danger ~~lower gland~~ the lower gland inside the body.

What is maintenance required for Stuffing Box

- Usually we change the packing, upper gland, lower gland if there broken packing and different size wire.

What is safety precaution required for Stuffing Box

- Wearing full PPE, especially safety gloves and glass because the wire very sharp.
- Use proper tool.

NG 11/6/23

What is potential hazard during handling Stuffing Box

- Pierced with wire.
- Fingers pinched by stuffing box.
- Overweight stuffing box make your backbone broke with wrong stills position body to handling.

Draw & name each part of stuffing box

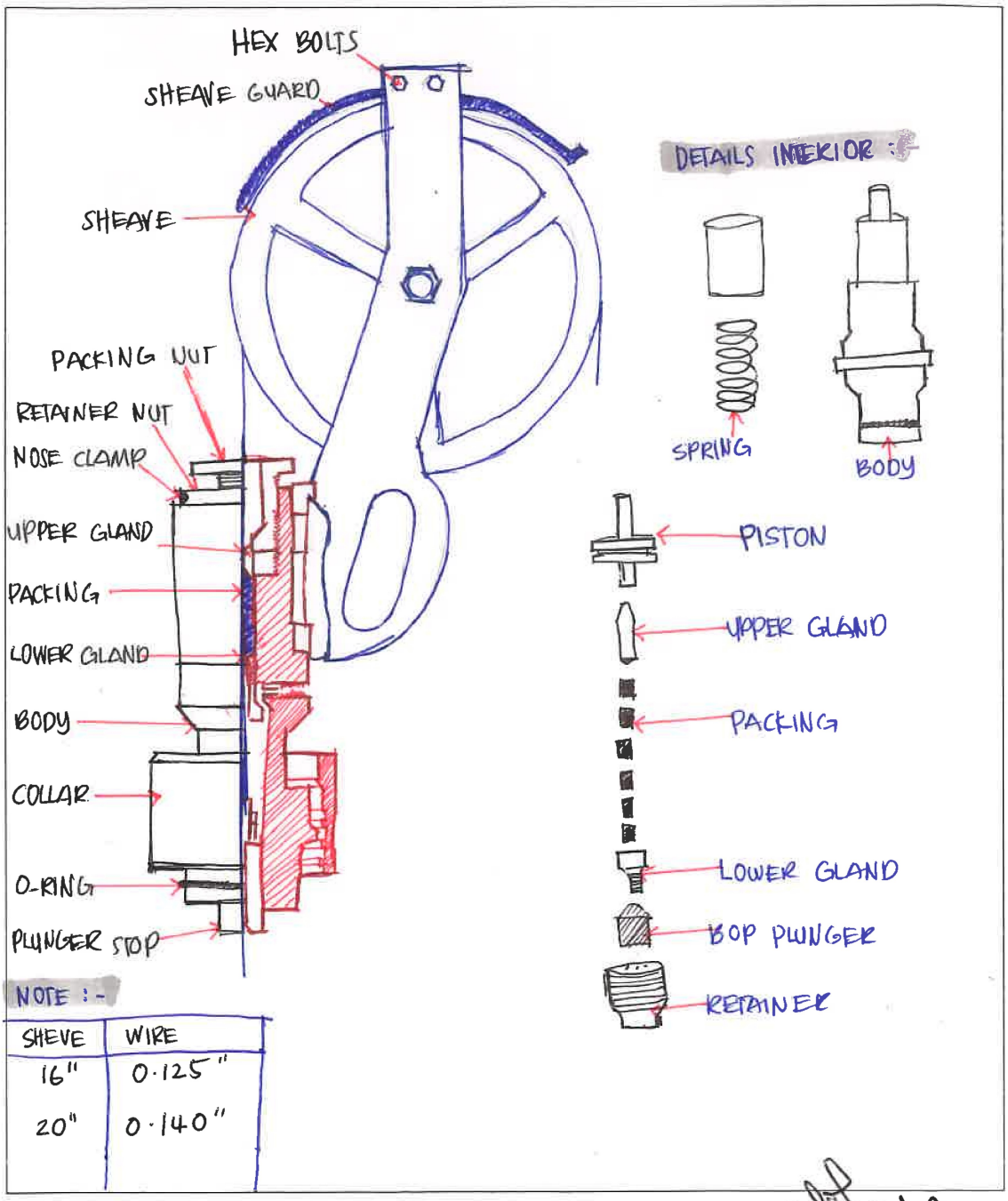

NOTE :-

SHEVE	WIRE
16"	0.125"
20"	0.140"

19/6/23

2. Lubricator

What is Lubricator

✓ Lubricator (also known as arisers) are a series of interconnected lengths of pipe.
✓ Positioned beetween stuffing box at (~~top~~ top) and BOP (bottom).

What is the purpose of Lubricator

✓ To provide a space for the tool to be contained in under pressure, when opening and closing the wellhead.

How to operate Lubricator

✓ Make sure connection box up and pin down are connected.

What is maintenance required for Lubricator

✓ - General damage and corrosion.
✓ - The condition of the needle valves on the lower section.
✓ - Visual inspection of the internal bore for corrosion and wire tracking/wear grooves.
✓ - Checking QU - o-ring groove, pin & box sealing surface, pin & box size.

What is safety precaution required for Lubricator

✓ - Magnetic particle inspection spray (MPI) - both connections.
✓ - Magnafluxing (MF) - both end connection.
✓ - Hardness test (HT or HRC) for H2S equipment - connection body
✓ - Wall thickness - at 90° intervals around body.

What is potential hazard during handling Lubricator

✓ Fingers stuck/pinch.
✓ Fell on your body or foot
✓ Backbone pain.

19/6/23

Draw & name each part of Lubricator

NOTES:-
ID - 0.15"/0.25" larger than OD tool.
LENGTH - 8ft (Lubricator) - 4ft, 2ft (pup).

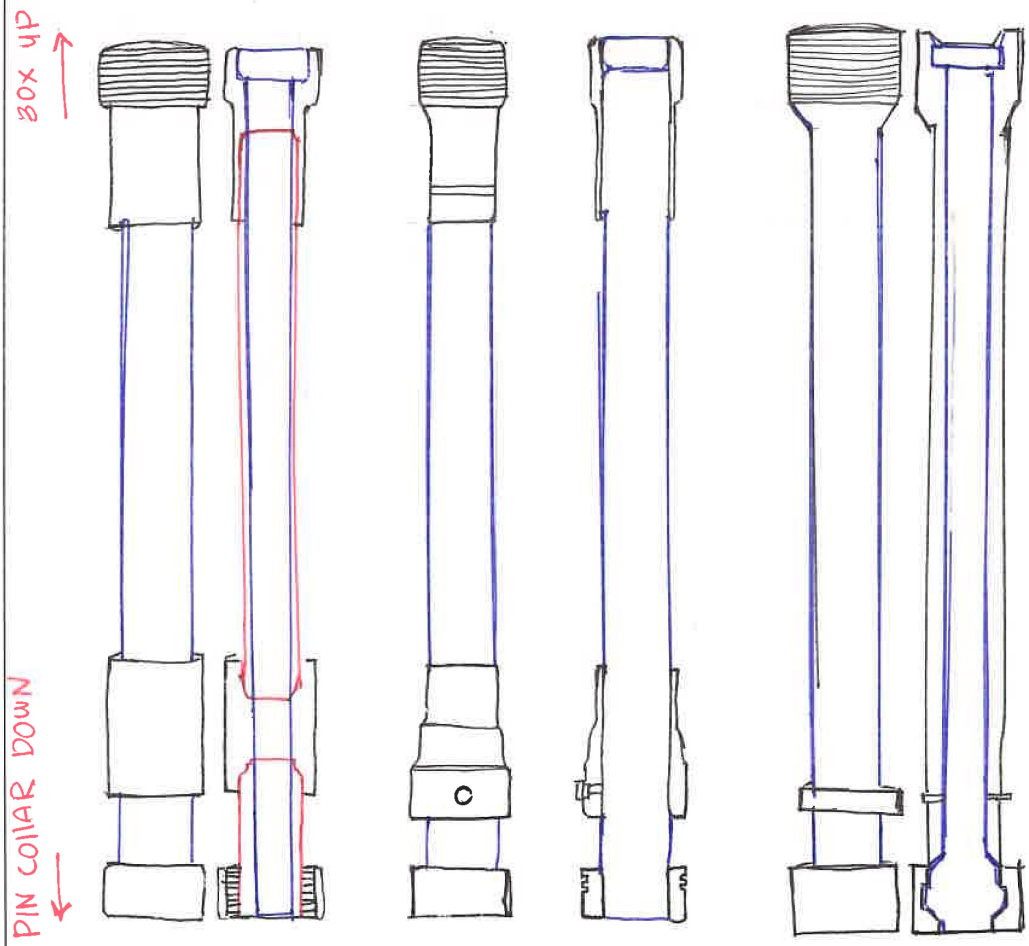

Conventional Lubricators (non ported)

Slimline Lubricators (ported)

Lightweight Lubricators (ported)

Pressure Rating of Lubricator

Working Pressure (WP) psi	Test Pressure (TP) psi
3000	4,500
5,000	7,500
10,000	15,000
15,000	22,500

19/6/23

3. Blowout Preventer (BOP)

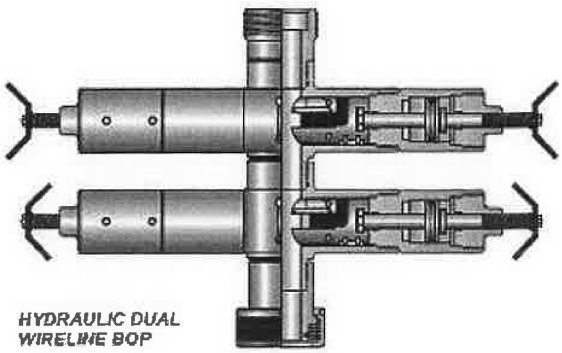

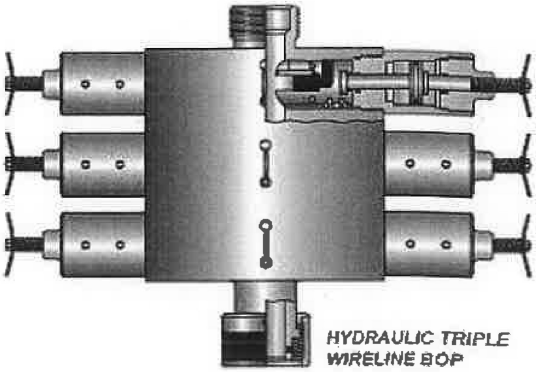

What is BOP

✓ Wireline valve is installed between the tree connection and lower lubricator section.

What is the purpose of BOP

✓ Enable the well pressure to be isolated without cutting the wire by closing the master valve.

✓ Allow slickline work under the well pressure on surface equipment, while wire in the wellbore.

How to operate BOP

✓ - Using mechanical or hydraulic force is applied to close the rams which seal around the wire.

What is maintenance required for BOP

✓ Changing BOP - Greasing

✓ - Function test equalizing port - Hyd

✓ - Function test BOP rams.

What is safety precaution required for BOP

✓ Makesure while handling BOP part, use a proper method.

What is potential hazard during handling BOP

- Running manual handling.
- Pinch point.

Draw & name each part of BOP

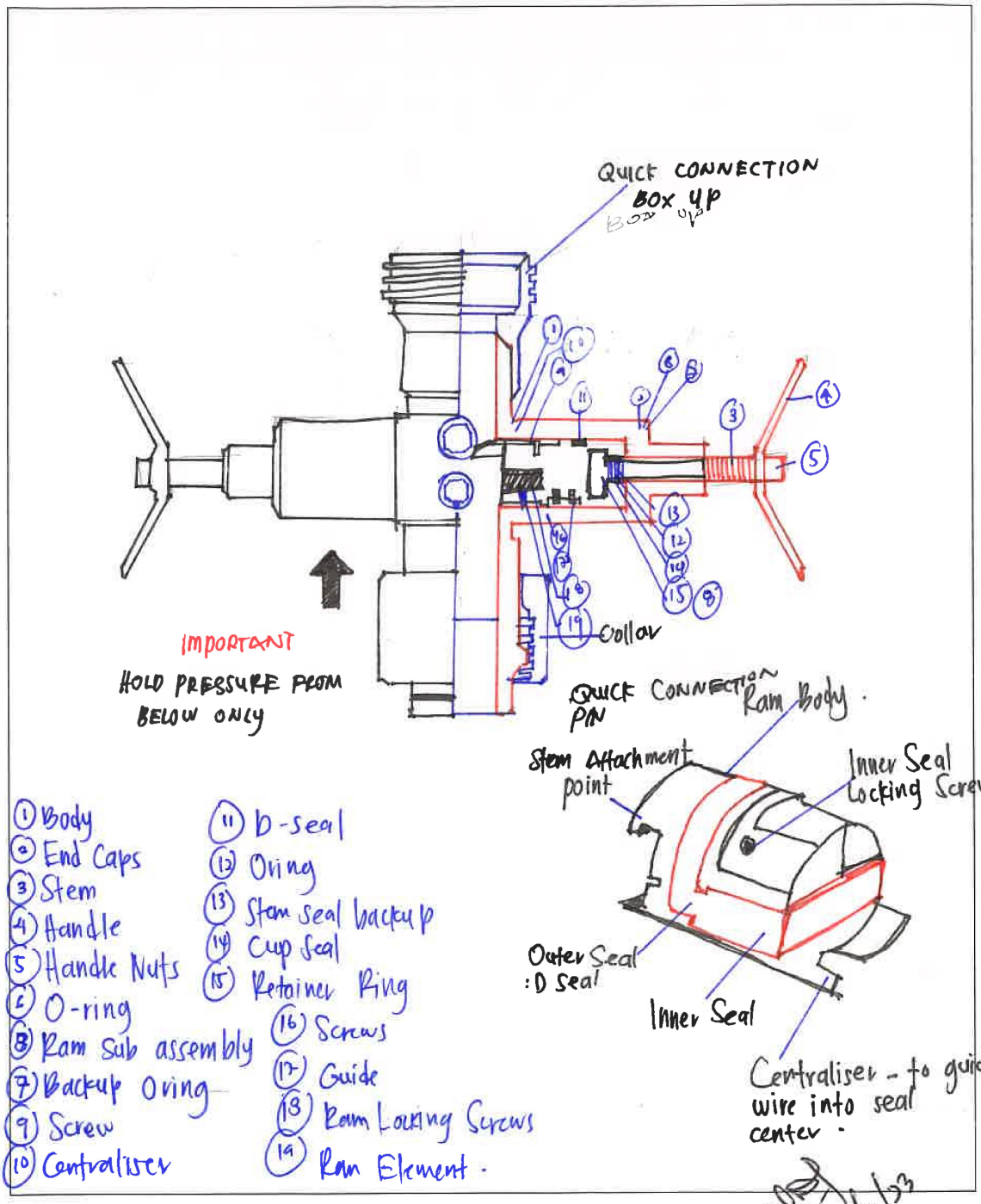

4. X-Mas Tree

What is x-mas tree

✓ A piece of equipment that provides flow control on a oil or gas well.

✓ A vertical assembly of valves with gauges and chockes that allow for adjustments in flow control as well as injection to stimulate production.

What is the purpose of x-mas tree

✓ To control flow oil and gas from well or shut in well for other operation.

✓ Safety barrier.

How to operate x-mas tree

✓ Close and open swab valve and ssv to isolate or shut in well flow.

✓ Use control panel for operate. (SSV @ ~~Hx~~ HMV)

What is maintenance required for x-mas tree

✓ Inspect gate valve condition.

✓ Greasing on the wellhead valve.

What is safety precaution required for x-mas tree

✓ Makesure correct count to turn during close and open the valve.

✓ Do not over the thighten during open and close.

What is potential hazard during handling x-mas tree

✓ Blow out

✓ Pressure trap.

✓ High pressure.

12/6/23

Draw & name each part of x-mas tree

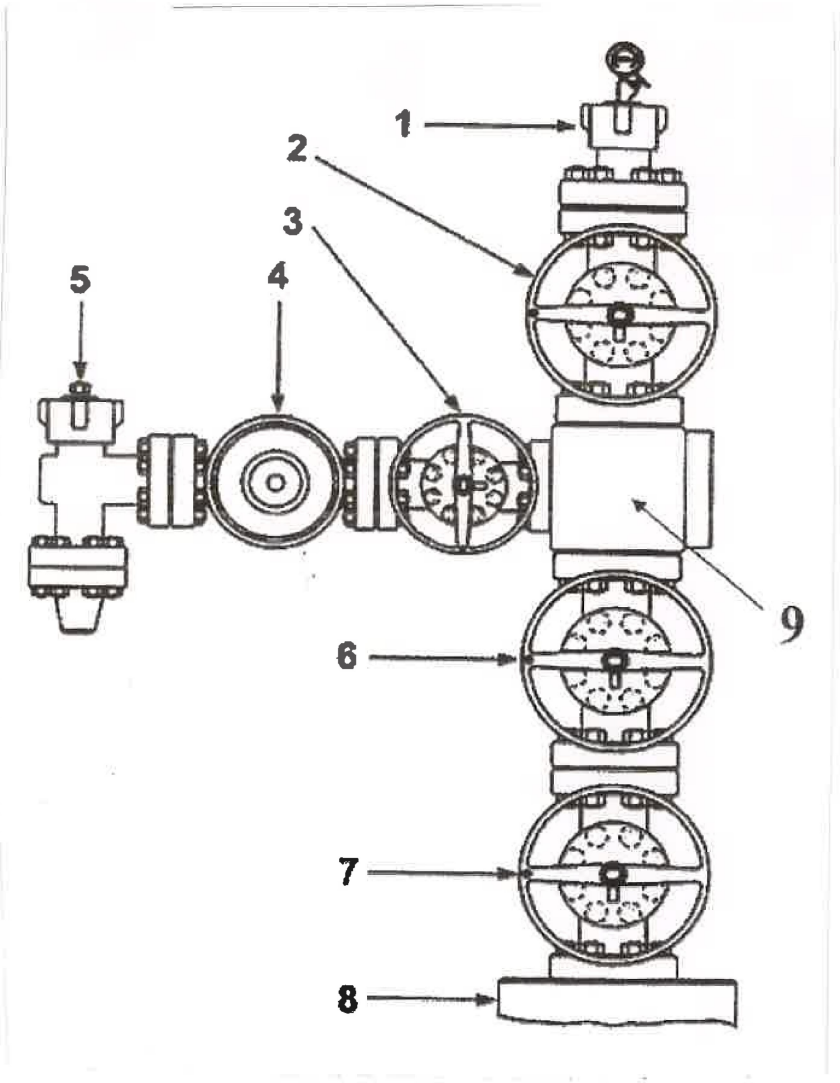

1. Christmas Tree Cap.
2. Swab Valve (Crown Valve).
3. Production Wing Valve
4. Surface Safety Valve
5. Choke
6. Upper Master Valve
8. Adapter Flange.

5. Wireline Reel Skid Unit (RSU) / Winch – Single Drum and Double Drum

What is RSU
✓ Reel Skid Unit
✓ To turn the wire drum to lower and rise tool strings in the wells that require wireline servicing.

What is the purpose of RSU
✓ To deliver and retriver down hole tool by using slickline wire.

How to operate RSU
✓ Get supply power from powerpack.
✓ Manual control gear and valve.

What is maintenance required for RSU
✓ - check hydraulic hose in good condition.
✓ - Visual check on body part and flame.
✓ - check gearbox condition.
✓ - Greasing.

What is safety precaution required for RSU
✓ - Makesure hose not leak.
✓ - Connection hose is tighted with safety pin/wechat.
✓ - Moving part.
✓ Use whip check.

What is potential hazard during handling RSU
✓ - Hose burst
✓ Manual handling
✓ Moving part.
✓ Pinch point.

19/6/23
NB

Draw & name each part of RSU

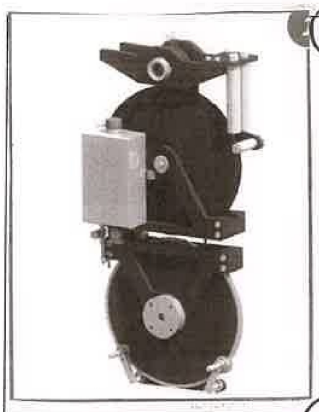

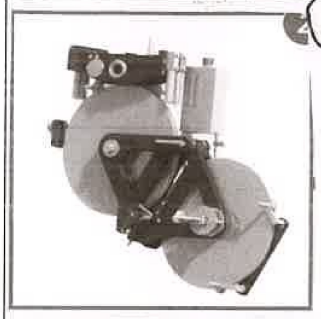

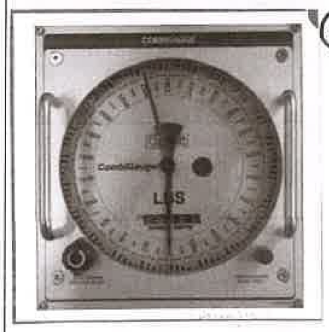

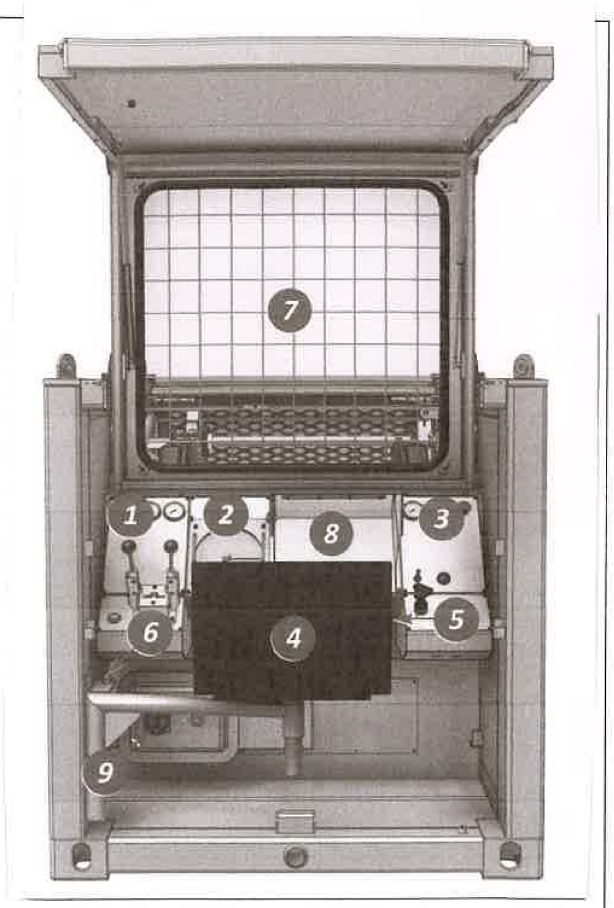

1. Left Control Panel.
2. Combi Gauge.
3. Right Control Panel.
4. Operator chair.
5. Levelwind wheel (in front of chair).
6. Operator Seat Securing pin.
7. Operator Safety Screen with optional protective grating.
8. Line Minder (Optional).
9. Line Minder power supply switch (optional).
10. MP 16 IV
11. MP 20

19/6/23

6. Odometer

What is Odometer

✓ Use to measuring depth into the well

What is the purpose of Odometer

✓ For operator look depth well and know about depth in well.

How to operate Odometer

✓ Can be operated when connect Odometer cable to the right angle drive. Right angle drive connect to counter wheel and odometer perform when counter wheel start spinning.

What is maintenance required for Odometer

✓ Greasing gear inside
✓ Checking meter odometer makesure it function.

What is safety precaution required for Odometer

✓ Glass odometer is clear.
✓ Make sure odometer number can readable.
✓ Pin broken.

What is potential hazard during handling Odometer

✓ Reading not accurate.
✓ Finger injury.
✓ Glass odometer broke.

19/6/23

Draw & name each part of Odometer

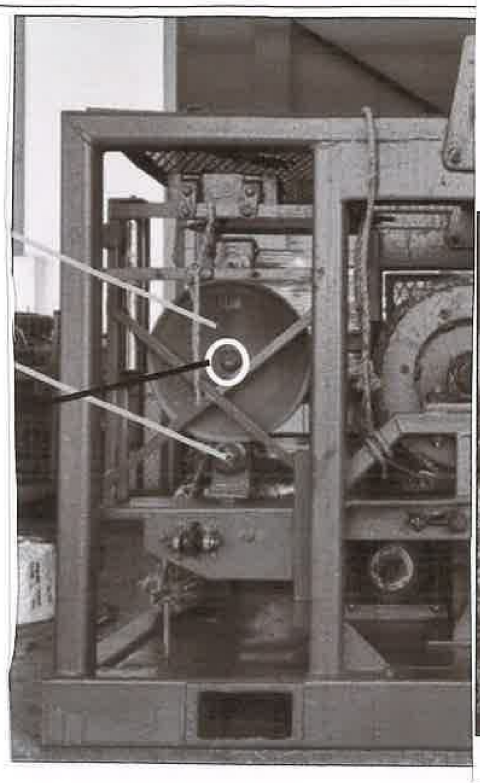

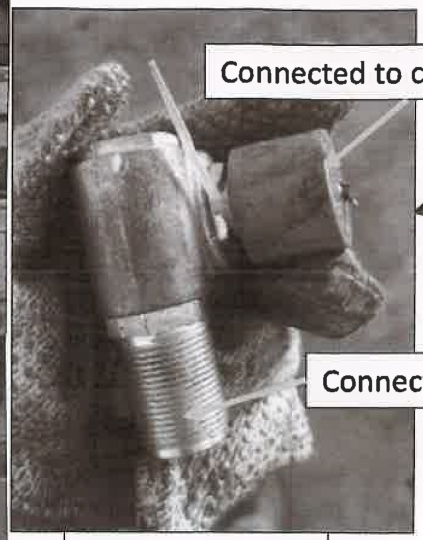

Counter Head/Wheel

Pressure Wheel

Connected to counter head

Connected to odometer

Right Angle Drive

(2) Zero depth.

* Counter cable is a cable that connects both odometer and right angle drive at RSU which converts the counter wheel rotation to depth units.

(1) Connection cable odometer to meter frame.

19/6/23

7. Weight indicator (200 lbs and 4000 lbs)

What is Weight Indicator

✓ Weight indicator is systems are designed to provide accurate measurement of downhole tool weight during wireline operation.

What is the purpose of Weight Indicator

✓ As a guide operator during running tool into the well.

How to operate Weight Indicator

✓ Connect weight indicator with load cell.
✓ Load cell connect with hay pulley.

What is maintenance required for Weight Indicator

✓ Callibrate gauge.
✓ Remove bubble in the hose.
✓ Topup oil.

What is safety precaution required for Weight Indicator

✓ Secure proper gauge.
✓ Secure hose properly.

What is potential hazard during handling Weight Indicator

✓ Incorrect reading gauge.
✓ Hose burst.

10/10/23

Draw & name each part of Weight Indicator

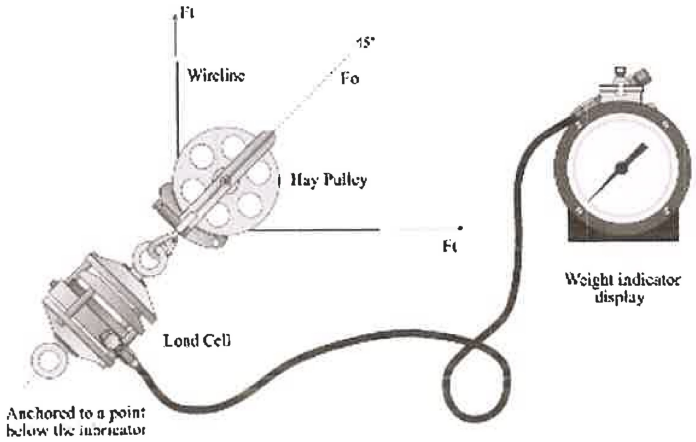

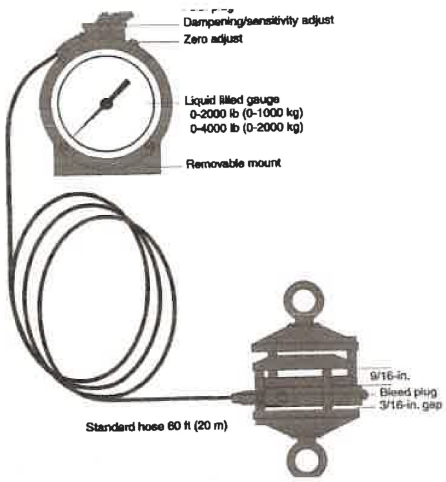

* To determine the total weight of tools hung in tubing string.

8. Spooling Device

What is Spooling Device
✓ Spooling device is device to spool new wire from reel to drum or drum wire to another drum.

What is the purpose of Spooling Device
✓ Purpose to tension wire while spool new wire into the drum.

How to operate Spooling Device
✓ Must connect power pack hose to spooling device.

What is maintenance required for Spooling Device
✓ Check hydraulic regulator.
✓ Check gear oil.

What is safety precaution required for Spooling Device
✓ Barricade work site area.
✓ Full PPE.

What is potential hazard during handling Spooling Device
✓ Hose burst.
✓ High tension wire.

19/6/23

Draw & name each part of Spooling Device

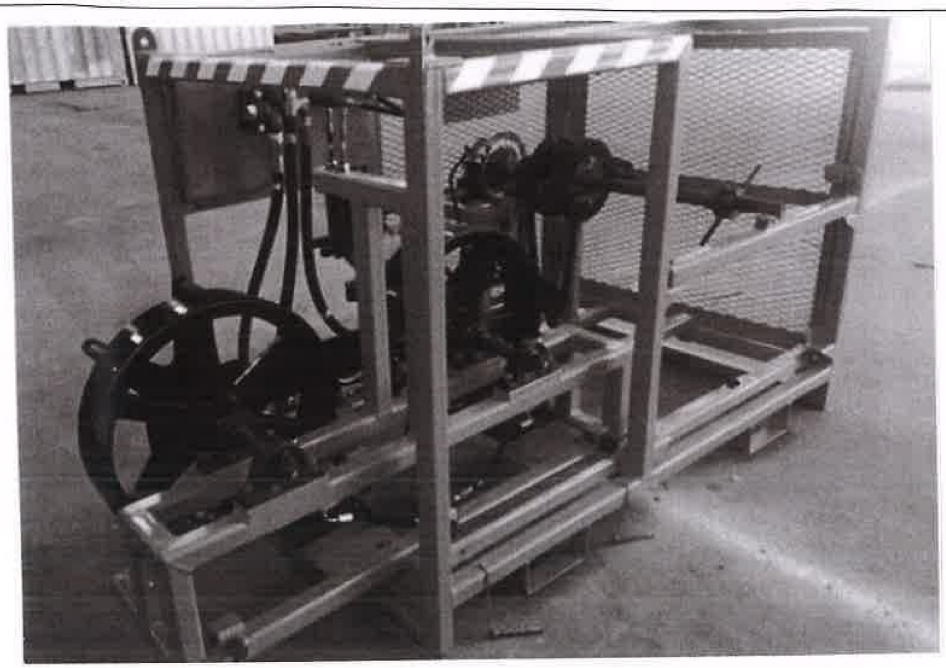

① Spooler Drum.
② Drive Sprocket
③ Pre-set spooling
④ Double brake in parallel.

19/6/23

9. Control Panel

What is Control Panel

✓ Control panel is device that contain gauge, air regulator and hydraulic to supply pressure.

What is the purpose of Control Panel

✓ - To operate surface equipment example to open and close BOP, stuffing box, Hydraulic Ball Valve.
✓ - To operate x-mass tree, open/close the SSV, HMV, LV.

How to operate Control Panel

✓ - Connect ac to supply air for controll panel.
✓ Using regulator to pressure up line.

What is maintenance required for Control Panel

✓ Check gauge
✓ Chek hose.
✓ Check all tubing and connection.
✓ Check hydraulic oil.

What is safety precaution required for Control Panel

✓ Secure all hoses connection.
✓ Dont stand at line of fire.
✓ Check all connection and fitting.

What is potential hazard during handling Control Panel

✓ Hoses burst.
✓ Tubing leaking / parted.
✓ High pressure.

Nof 19/6/23

Draw & name each part of Control Panel

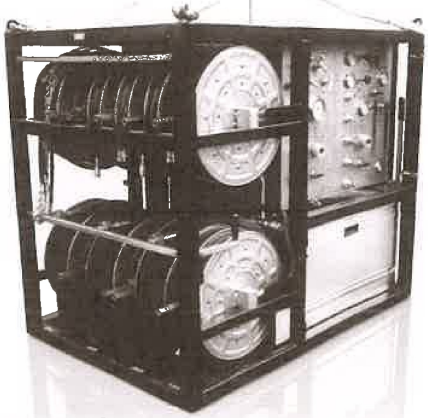

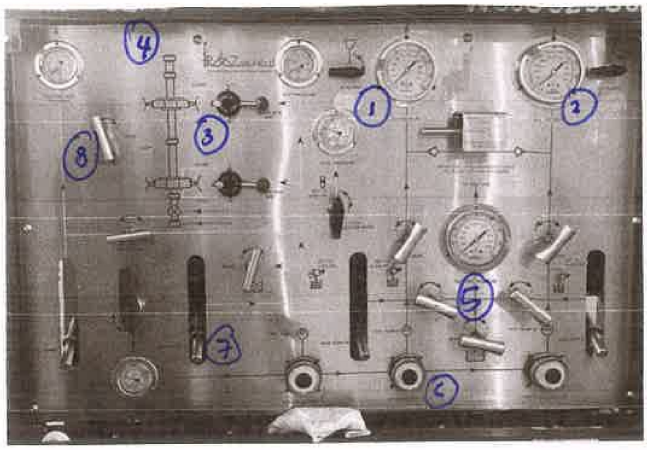

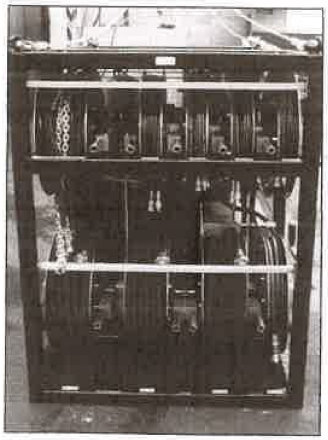

(6) Regulator
(7) Manual Hand Pump
(8) Bleed off

	SYSTEM	PUMP TYPE	WORKING PRESSURE	
(1)	SCSSV	AIR/HYDRAULIC	0-10,000 PSI	(690 BAR)
(2)	HMV	" "	0-6,000 PSI	(413 BAR)
(3)	TWO BOP	" "	0-5,000 PSI	(344 BAR)
(4)	STUFFING BOX	MANUAL/HYDRAULIC	0-5,000 PSI	(344 BAR)
(5)	TEST LINE	AIR/HYDRAULIC	0-10,000 PSI	(690 BAR)

19/8/23

10. Huskel ~~Drum~~ pump.

What is Huskel ~~Drum~~ pump.

✓ Generate fluid pressure.

What is the purpose of Huskel ~~Drum~~ pump.

✓ To convert air pressure to hydraulic pressure / fluid pressure.
✓ Fill up water.

How to operate Huskel ~~Drum~~ pump.

✓ Air supply control by air regulator.

What is maintenance required for Huskel ~~Drum~~ pump.

✓ Service pump.
✓ Redress rot.

What is safety precaution required for Huskel ~~Drum~~ pump.

✓ Barricade area while function test.

What is potential hazard during handling Huskel ~~Drum~~ pump.

✓ Air hose burst.
✓ Trap pressure.

19/6/23

Draw & name each part of Huskel ~~Dram~~ pump.

Test Pump:
Maximator - TP1, 2, 3.
Haskel Pump - TP4, 5, 6

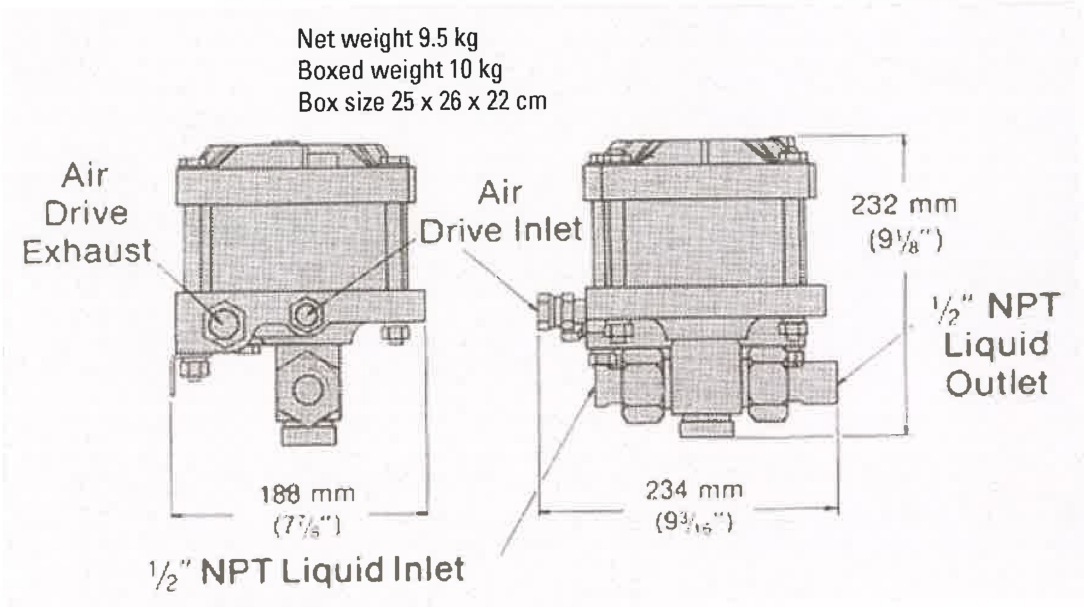

19/6/23
NAP

11. Power Pack (Electrical & Diesel)

What is Power Pack

✓ Power pack is hydraulic supplier that contain engine to run hydraulic pump.

What is the purpose of Power Pack

✓ To supply hydraulic for run hydraulic motor.

How to operate Power Pack

✓ Connect hydraulic hose to RSU then connect air hose to power pack to start.

What is maintenance required for Power Pack

✓ Change engine oil filter and check drain water on tank.
✓ Service when running hour.

What is safety precaution required for Power Pack

✓ Checking hose in good condition.
✓ Checking engine oil, water before start.
✓ Checking engine in good condition.

What is potential hazard during handling Power Pack

✓ High pressure.
✓ Noise sound.
✓ Rotating Part.
✓ Hot Engine.

N.P
19/6/23

Draw & name each part of Power Pack

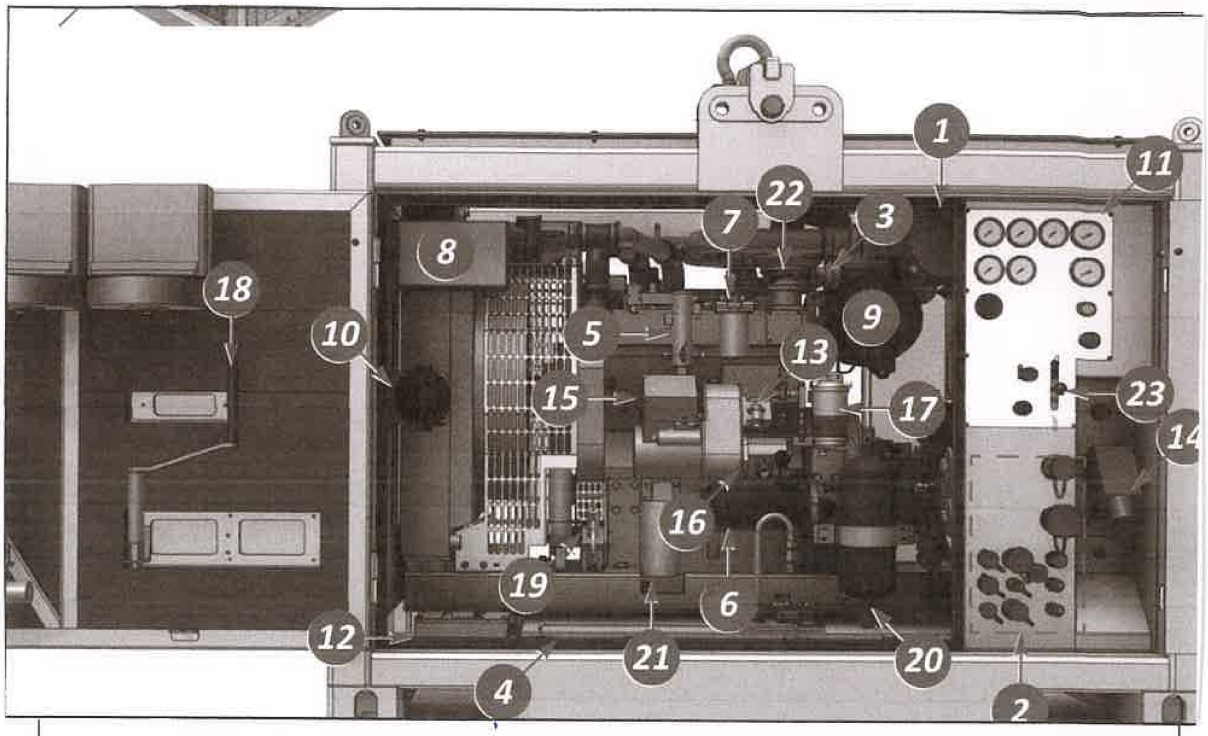

1. Exhaust Silencer
2. Pneumatic and Hydraulic connectors
3. Engine Flame Trap Breather (Zone 2 only)
4. Fuel Tank
5. Fuel Safety (Sentinel) Valve
6. Spring Starter
7. Fuel Fine Filter
8. Electric Junction Box
9. Engine Air Intake Filter (naturally aspirated power pack).
10. Battery Isolation Switch.
11. Control Panel
12. Battery
13. Fuel Pump
14. Electrical Connector
15. Engine Compressor
16. Auxiliary Drive Pump
17. Fuel Prefilter & Water Separator
18. Spring Starter Crank Handle.
19. Engine Oil Sump Pump.
20. Fuel Purifier.
21. Engine Oil Filter.
22. Engine Air Intake Safety Valve.
23. Air Inlet Valve Control Handle.

19/6/23

12. Air Compressor

What is Air Compressor
✓ Surface equipment that use to storage air.

What is the purpose of Air Compressor
✓ Supply air for the use to start surface equipment use air starter system.

How to operate Air Compressor
✓ Using spring starter, hydraulic starter to power up.
✓ Set air pressure using prv.

What is maintenance required for Air Compressor
✓ Change engine oil, filter, air cooler and water.
✓ check hose in good condition.

What is safety precaution required for Air Compressor
✓ Make sure engine in good condition.
✓ Beware when rotating part.

What is potential hazard during handling Air Compressor
✓ Noise sound.
✓ High pressure air.
✓ Hose burst.

19/6/23

Draw & name each part of Air Compressor

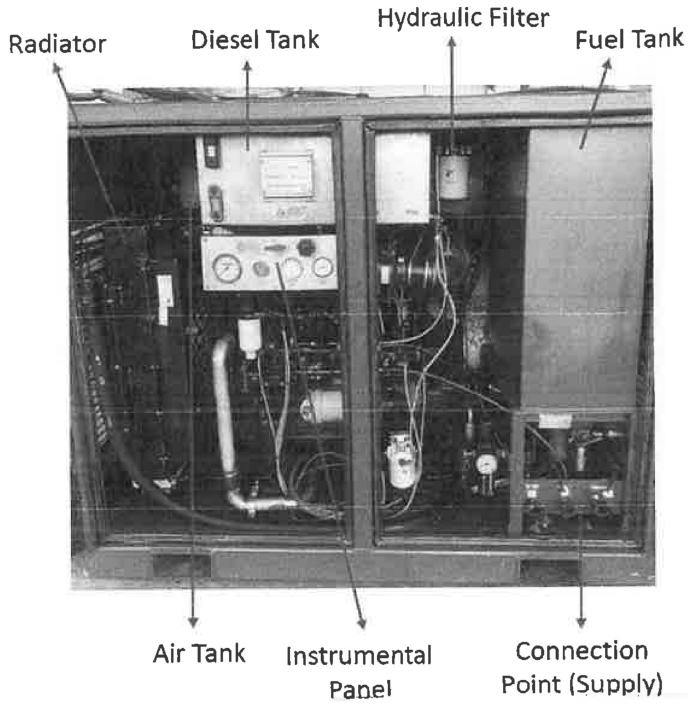

13. Drum

What is the purpose of Drum

✓ The drum can be single or double to running wire line operations pull in/out and brake.

Do the right and wrong wire arrangement from drum to hay pulley

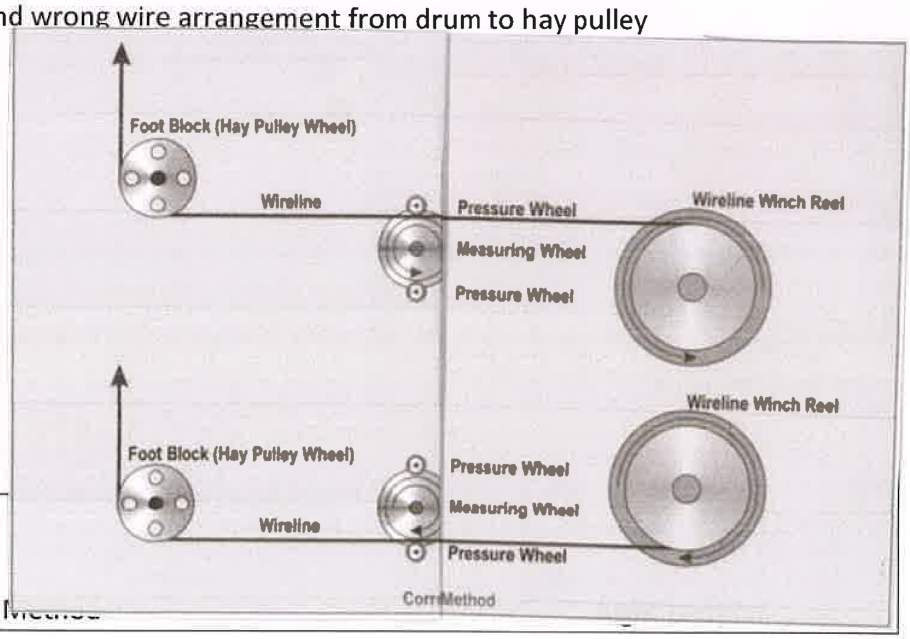

✓ Wrong Method

What is maintenance required for Drum

✓ Greasing bearing.

What is safety precaution required for Drum

✓ Rotating ~~Cag~~ Casing.

What is potential hazard during handling Drum

✓ Pitch point.
✓ Sharp edge.

19/6/23

Please draw/sketch the toolstring configuration for:

1) Drift run/tubing clearance check
2) Sinker bar run
3) Set and retrieve plug
4) Set and retrieve insert valve

1).

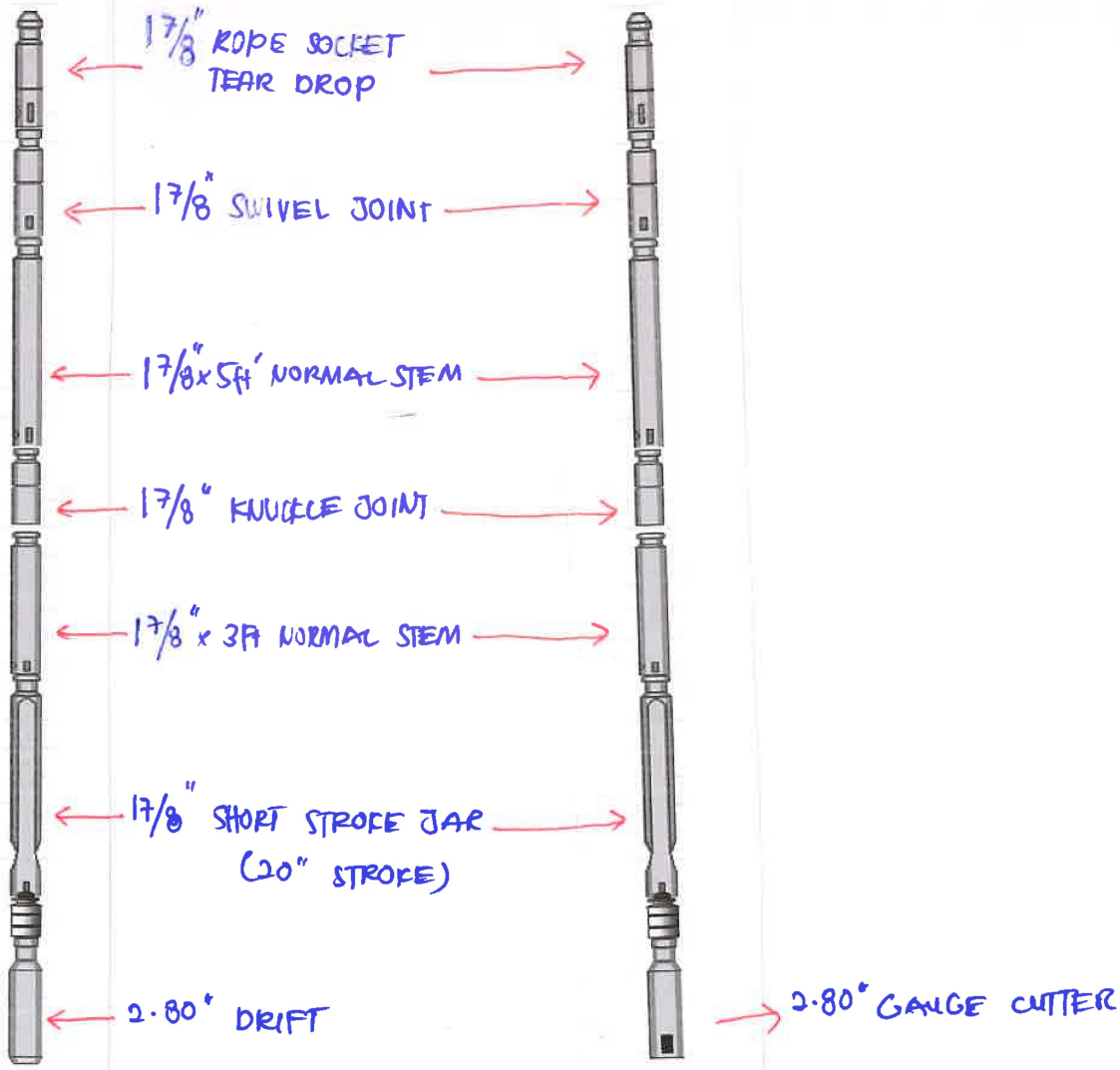

NSF 21/6/23

2)

1 7/8" ROPE SOCKET
TEAR DROP

1 7/8" SWIVEL JOINT

1 7/8" x 5FT' NORMAL STEM

1 7/8" KNUCKLE JOINT

1 7/8" x 3FT' NORMAL STEM

1 7/8" SHORT STROKE JAR
(20" STROKE)

1 7/8" x 2FT. SINKER BAR

19/6/23

3)

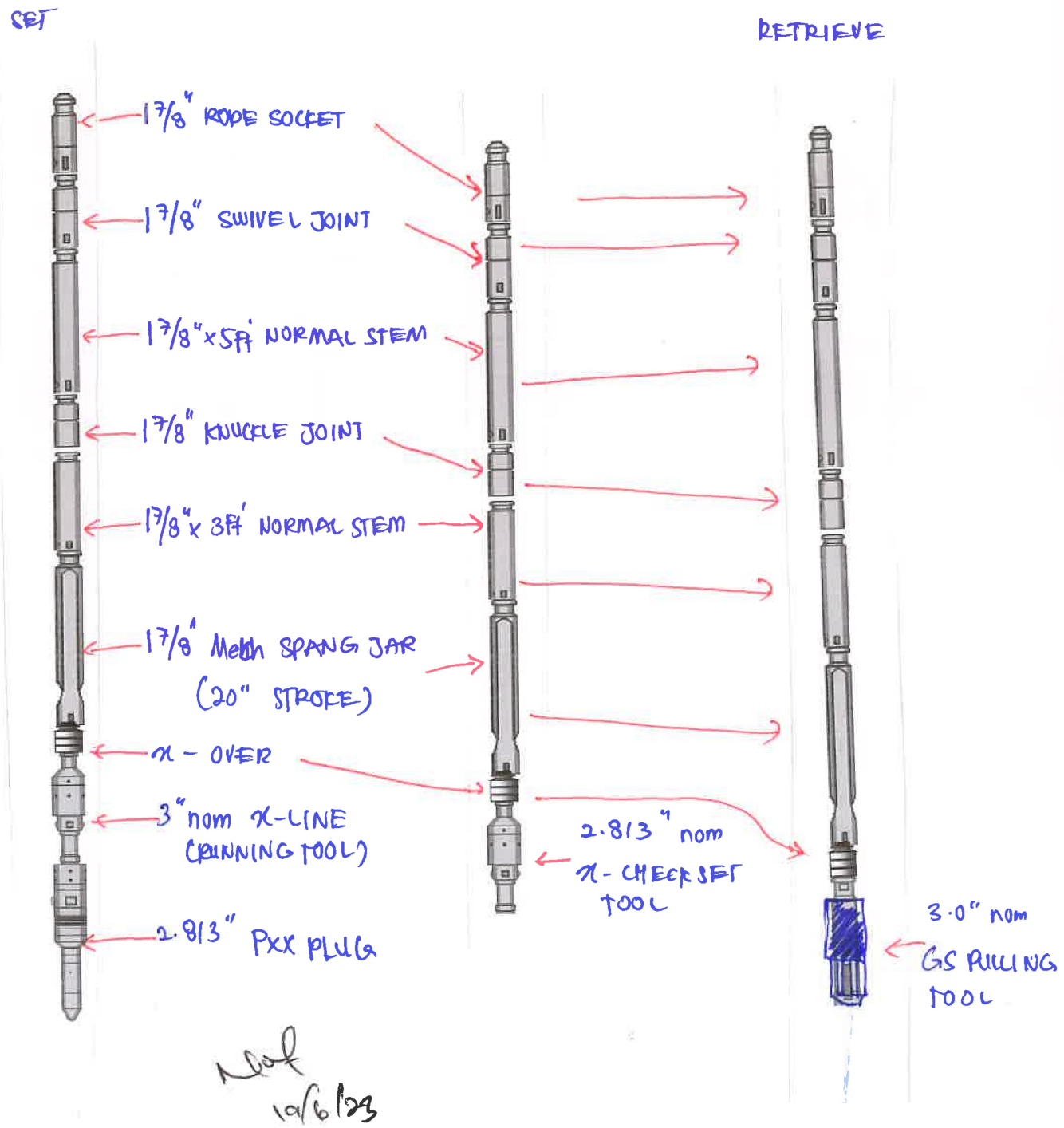
SET
RETRIEVE
1 7/8" ROPE SOCKET
1 7/8" SWIVEL JOINT
1 7/8" x 5ft NORMAL STEM
1 7/8" KNUCKLE JOINT
1 7/8" x 3ft NORMAL STEM
1 7/8" Mech SPANG JAR
(20" STROKE)
x - OVER
3" nom x-LINE
(RUNNING TOOL)
2.813" PXX PLUG
2.813" nom
x - CHECK SET
TOOL
3.0" nom
GS PULLING
TOOL

10/6/23

4)

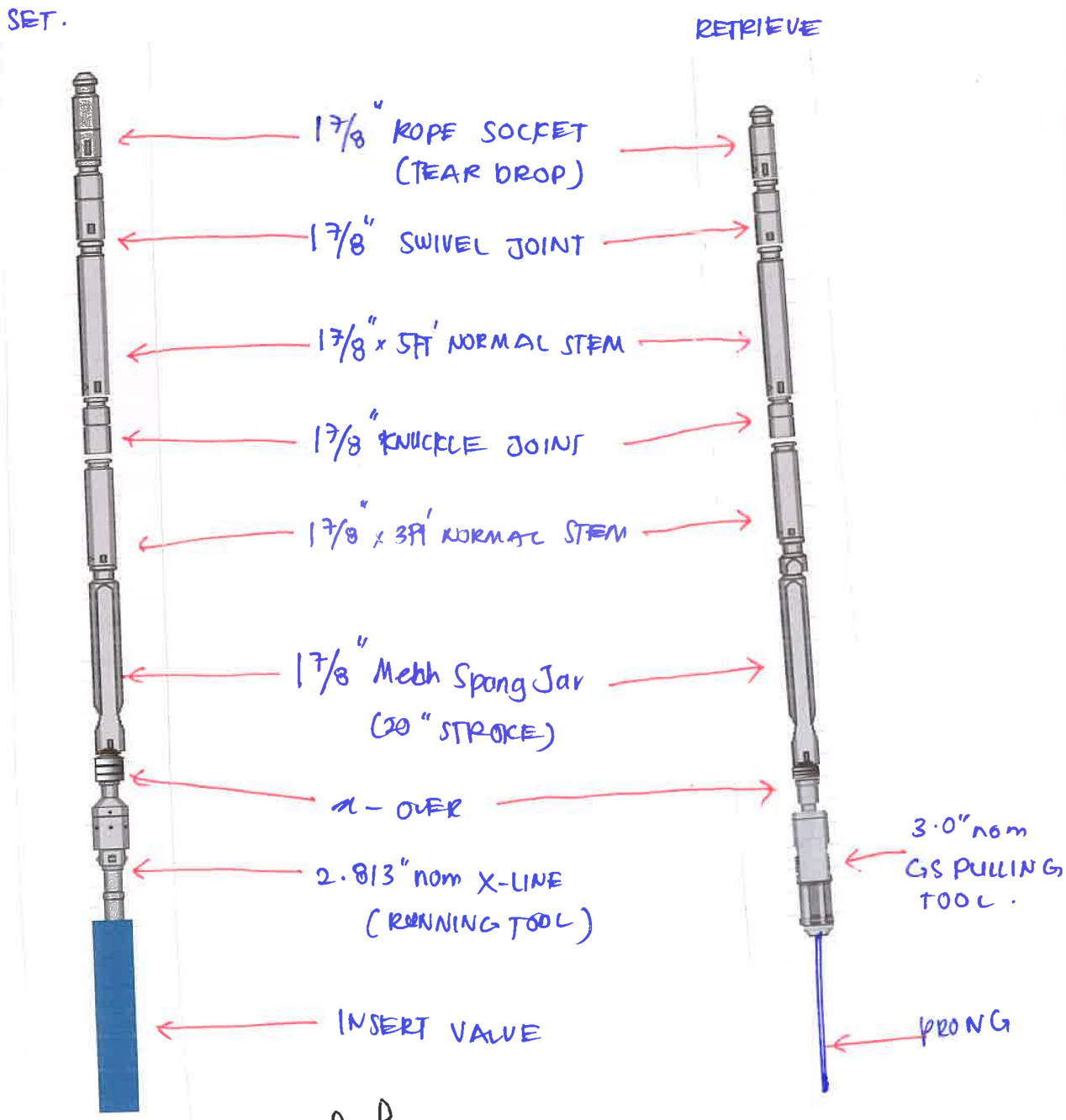
SET.
RETRIEVE
1 7/8" ROPE SOCKET (TEAR DROP)
1 7/8" SWIVEL JOINT
1 7/8" x 5FT NORMAL STEM
1 7/8" KNUCKLE JOINT
1 7/8" x 3FT NORMAL STEM
1 7/8" Mech Spang Jar (20" STROKE)
X - OVER
2.813" nom X-LINE (RUNNING TOOL)
INSERT VALVE
3.0" nom GS PULLING TOOL.
PRONG

19/06/23